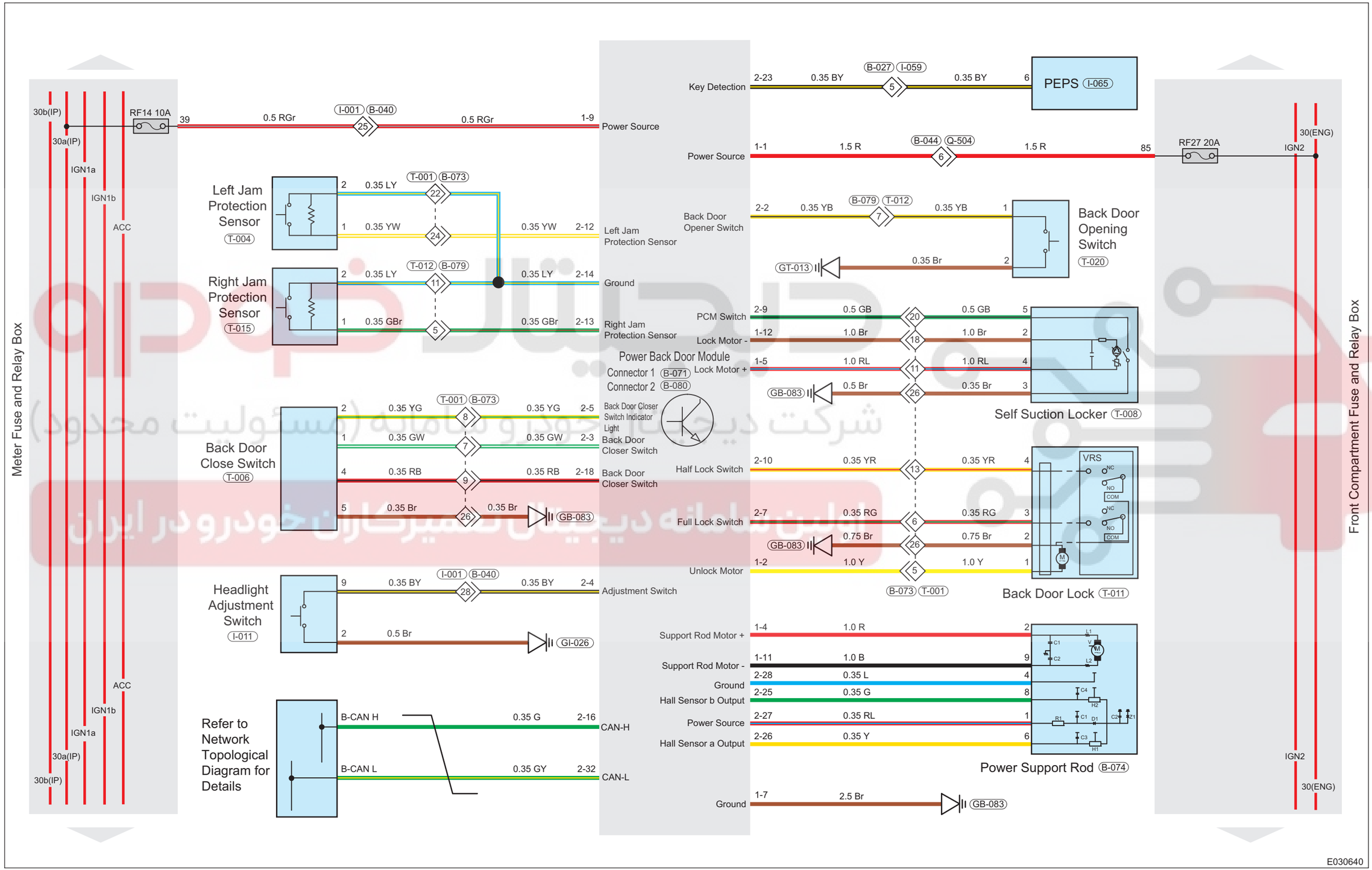(24), Power Back Door