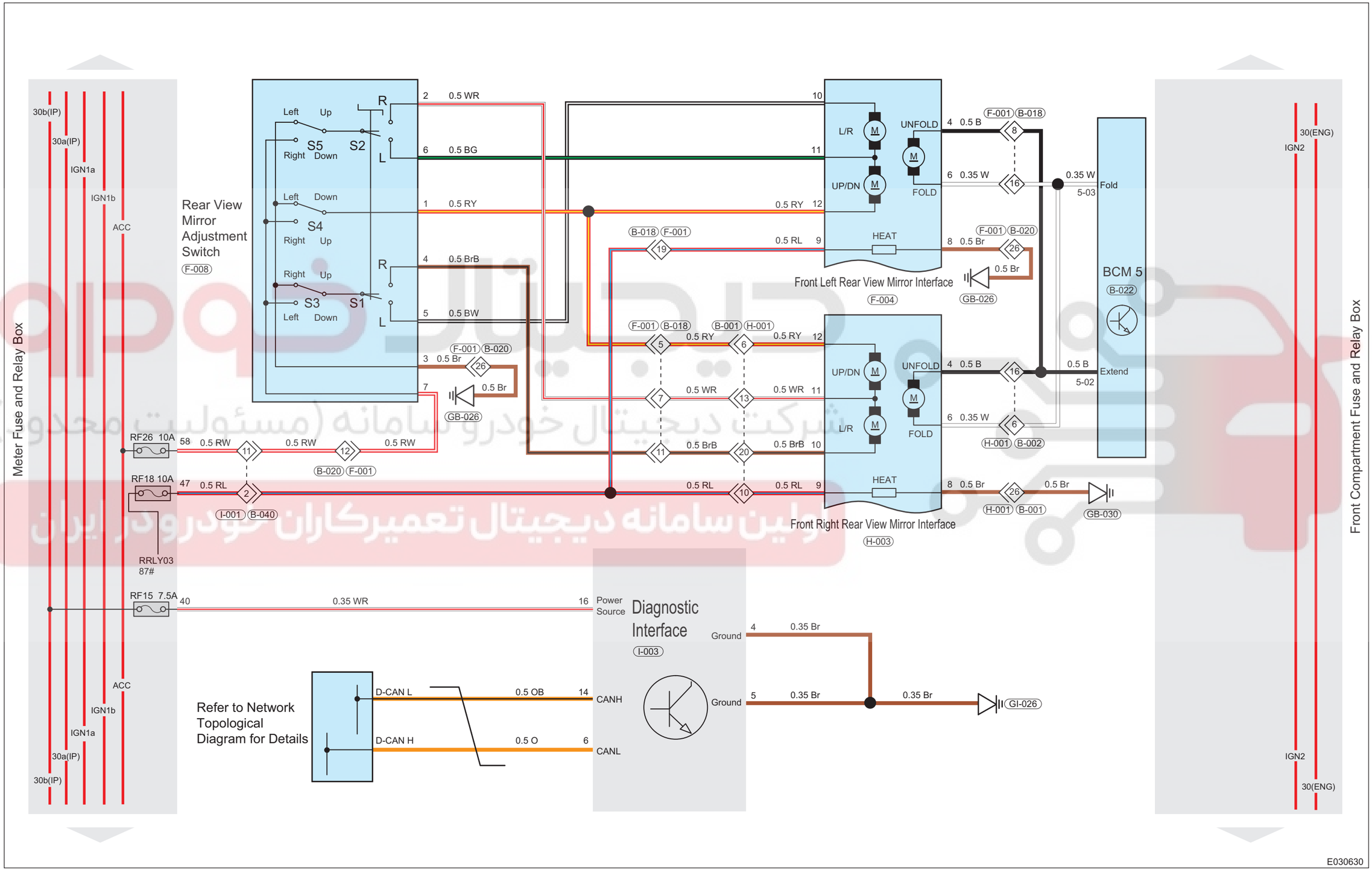(23), Power Rear View Mirror, Diagnostic Interface