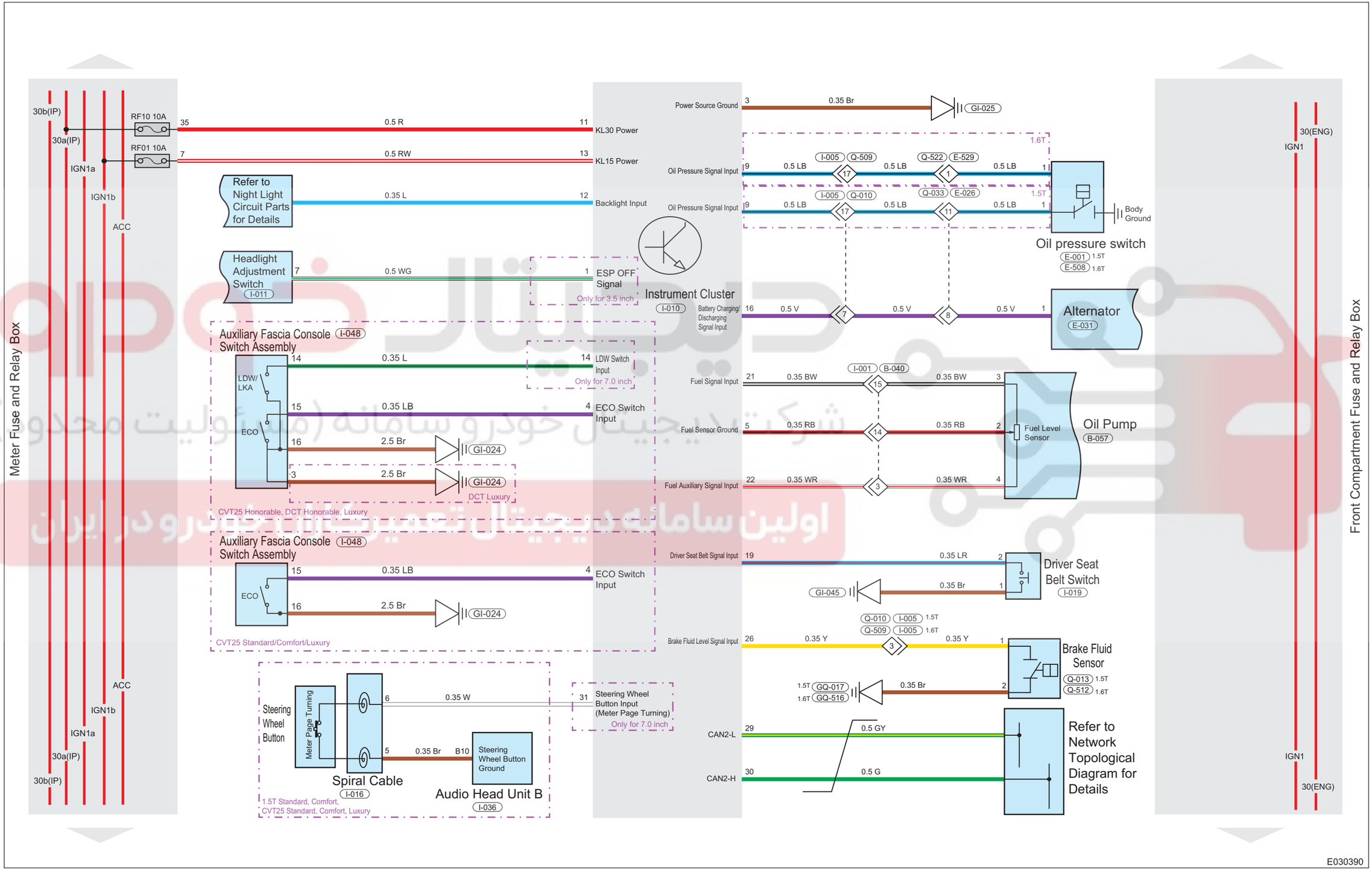(9), Instrument Cluster System