WWW.DIGITALKHODRO.COM 021 62 99 92 92

BRAKE CONTROL SYSTEM

GENERAL INFORMATION **21-3**
- **Overview** **21-3**
  - Description 21-3
  - ABS/ESP Operation 21-4
  - Hill Descent Control (HDC) 21-7
  - Specifications 21-8
  - Tool 21-8
  - Technical Parameters Table 21-8

DIAGNOSIS & TESTING **21-9**
- **Diagnostic Contents** **21-9**
  - Problem Symptoms Table 21-9
  - Failure Analysis Table 21-10
  - Diagnosis Procedure 21-11
  - Problem Repair (No DTC) 21-13
  - DTC Confirmation Procedure 21-13
  - Intermittent DTC Troubleshooting 21-13
  - Ground Inspection 21-14
  - ABS/ESP Control Module Assembly Terminal List (EPB) 21-14
  - Diagnostic Tester Menu Function and Date Flow 21-15
  - Calibration 21-19
  - Diagnostic Trouble Code (DTC) Chart 21-23

C0001-04 **21-27**
C0002-04 **21-27**
C0003-04 **21-27**
C0004-04 **21-27**
C0010-04 **21-27**
C0011-04 **21-27**
C0014-04 **21-27**
C0015-04 **21-27**
C0018-04 **21-27**
C0019-04 **21-27**
C001C-04 **21-27**
C001D-04 **21-27**
C0020-04 **21-33**
C0031-00 **21-37**
C0031-09 **21-37**
C0031-11 **21-37**
C0031-12 **21-37**
C0031-13 **21-37**
C0031-29 **21-37**
C0031-37 **21-37**
C0034-00 **21-42**
C0034-09 **21-42**
C0034-11 **21-42**
C0034-12 **21-42**
C0034-13 **21-42**
C0034-29 **21-42**
C0034-37 **21-42**
C0037-00 **21-47**
C0037-09 **21-47**
C0037-11 **21-47**
C0037-12 **21-47**
C0037-13 **21-47**
C0037-29 **21-47**
C0037-37 **21-47**
C003A-00 **21-52**
C003A-09 **21-52**
C003A-11 **21-52**
C003A-12 **21-52**
C003A-13 **21-52**
C003A-29 **21-52**
C003A-37 **21-52**
C0051-29 **21-57**
C0051-54 **21-57**
C0051-64 **21-57**
U0126-87 **21-57**
U0428-81 **21-57**
C0061-64 **21-63**
C0062-64 **21-63**
C0063-64 **21-63**
C0063-01 **21-63**
C0063-54 **21-63**
C006B-00 **21-65**
C0089-04 **21-68**
C1000-16 **21-70**
C1000-17 **21-70**
C1001-04 **21-70**
C1009-00 **21-70**
U0005-00 **21-74**
U0007-00 **21-74**
U0073-88 **21-74**
U0100-87 **21-74**
U0101-87 **21-74**
U0140-87 **21-74**
U0401-81 **21-74**
U0402-81 **21-74**
U0422-81 **21-74**
C1002-49 **21-74**

WWW.DIGITALKHODRO.COM 021 62 99 92 92

WWW.DIGITALKHODRO.COM 021 62 99 92 92

ON-VEHICLE SERVICE **21-81**
Brake System Bleeding **21-81**
Operation Step 21-81
ABS/ESP Control Module Assembly **21-82**
Removal 21-82
Disassembly 21-83
Installation 21-83
Front Wheel Speed Sensor (Front Left Wheel as Example) **21-84**
Removal 21-84
Inspection 21-85
Installation 21-86
Rear Wheel Speed Sensor (Rear Left Wheel as Example) **21-87**
Removal 21-87
Inspection 21-88
Installation 21-89
Steering Angle Sensor **21-90**
Removal 21-90
Installation 21-91

دیجیتال خودرو
شرکت دیجیتال خودرو سامانه (مسئولیت محدود)
اولین سامانه دیجیتال تعمیرکاران خودرو در ایران

WWW.DIGITALKHODRO.COM 021 62 99 92 92

WWW.DIGITALKHODRO.COM 021 62 99 92 92

GENERAL INFORMATION

Overview

Description

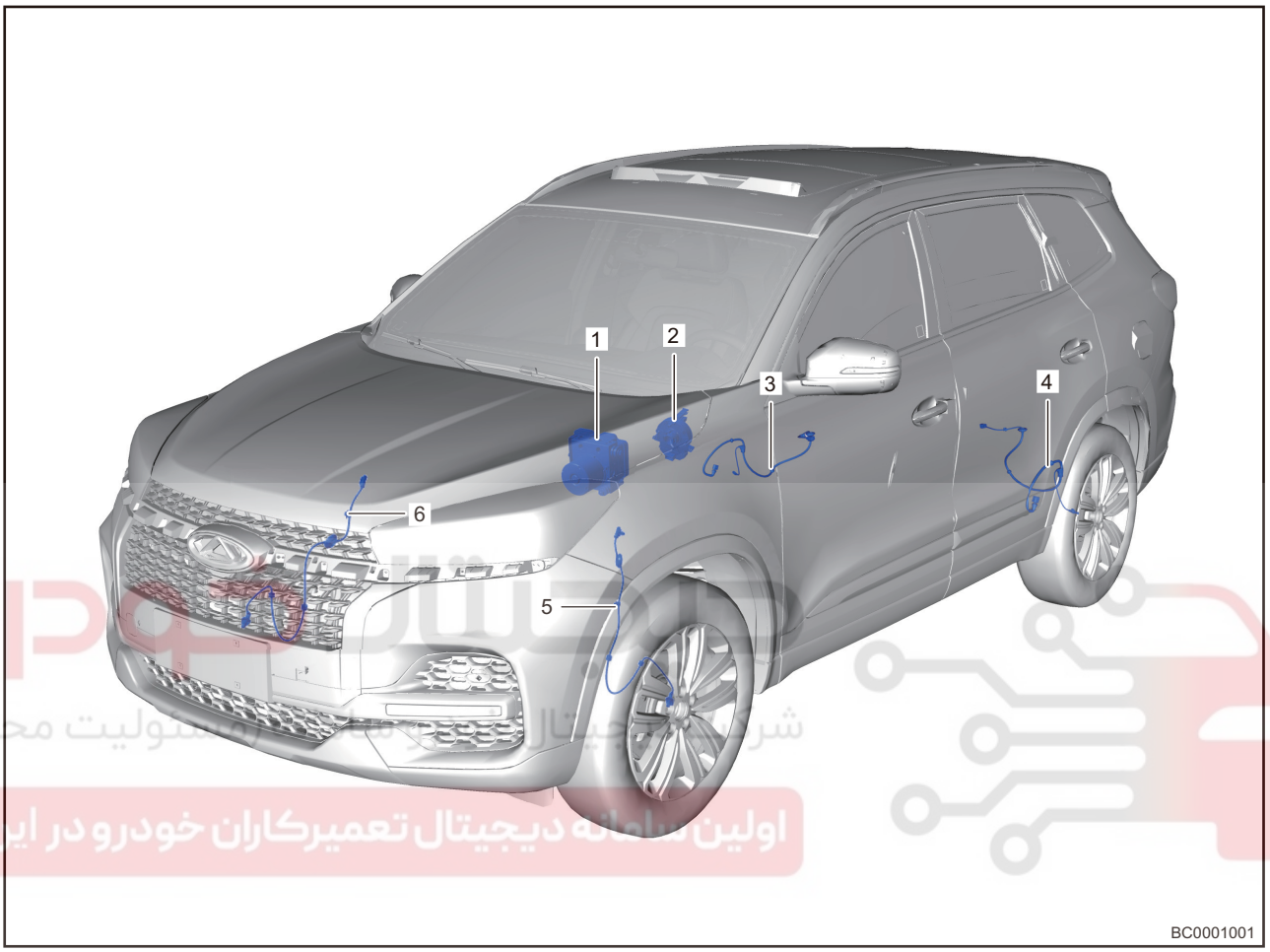

1 - ABS/ESP Control Module Assembly	2 - Steering Angle Sensor
3 - Rear Right Wheel Speed Sensor	4 - Rear Left Wheel Speed Sensor
5 - Front Left Wheel Speed Sensor	6 - Front Right Wheel Speed Sensor

Brake control system equipped on this model is ABS (Anti-lock Brake System) + EBD (Electronic Brake Force Distribution), ESP (Body Electronic Stability Program). With HDC (Hill Descent Control). It mainly consist of following components:

- ABS/ESP control module assembly (hydraulic control module and electronic control module).
- Wheel speed sensors (each wheel has one sensor).
- Steering angle sensor (ESP).
- Yaw rate sensor (built in ESP control module assembly).
- HBA is English abbreviation of brake assist system, is extended function of ESP system. In emergency situation, drivers always apply brake timely, but not apply maximum brake force generally, thus extending brake distance. When this occurs, brake assist system will operate: when driver depresses brake pedal quickly in emergency with insufficient depressing force, HBA will increase brake pressure to maximum quickly, thus brake distance will be shortened by anti-lock brake system quickly and effectively.

WWW.DIGITALKHODRO.COM 021 62 99 92 92

WWW.DIGITALKHODRO.COM 021 62 99 92 92

- HHC is English abbreviation of Hill-start Assist Control System. When vehicle is static, HHC will determine if vehicle is on slope via longitudinal acceleration sensor. When vehicle starts to up from resting state (uphill forward or reversing), HHC will enter operating state automatically. When starting off, system will keep previous brake pressure for 1 to 2 seconds after driver releases brake pedal, make sure vehicle is still stopped. Brake pressure will decrease when drive torque increases, thus avoiding an accident caused by vehicle sliding rearward during starting off on a slope.
- TCS is English abbreviation of Traction Control System. Drive wheel may slip when vehicle starts up or accelerates rapidly. Accident may occur due to direction out of control on smooth road surface such as ice and snow etc. TCS detects that drive wheel idling can be avoided when accelerating by applying brake to idling wheel or decreasing engine torque when driven wheel speed is lower than drive wheel (a feature of sliding).

Primary purpose of ABS is to prevent wheels from being locked during sudden braking. It has following effects:

- Improving vehicle driving stability.
- Improving vehicle steering ability.
- Maintaining optimal brake pressure.
- Shortening brake distance efficiently.

ABS/ESP Operation

1. ABS Braking
   (a) If ABS system detects that wheels may be locked when applying brake, brake system will enter ABS braking mode. During braking, ABS/ESP control module outputs signal from each wheel speed sensor to each solenoid valve after analysis in order to adjust fluid pressure in each line, to prevent wheels from being locked.
   (b) There are some operating symptoms of ABS/ESP, but in fact they are normal.
      - If electronic control module is malfunctioning, fail-safe function will be activated, ABS/ESP system will not operate and ABS/ESP warning light will come on.
      - After vehicle is powered on or engine is started, short "buzz" sound can be heard. This is normal sound from ABS/ESP self-check.
      - Motor, solenoid valve, and return pump movement in hydraulic unit will cause noise when ABS/ESP is operating normally, but this is normal.
      - Brake pedal may vibrate slightly and mechanical noise can be heard during ABS/ESP operation, but this is normal.
      - Bumping sound between suspension and vehicle body can be caused by sudden brake.

WWW.DIGITALKHODRO.COM 021 62 99 92 92

WWW.DIGITALKHODRO.COM 021 62 99 92 92

2. ABS/ESP Control Mode

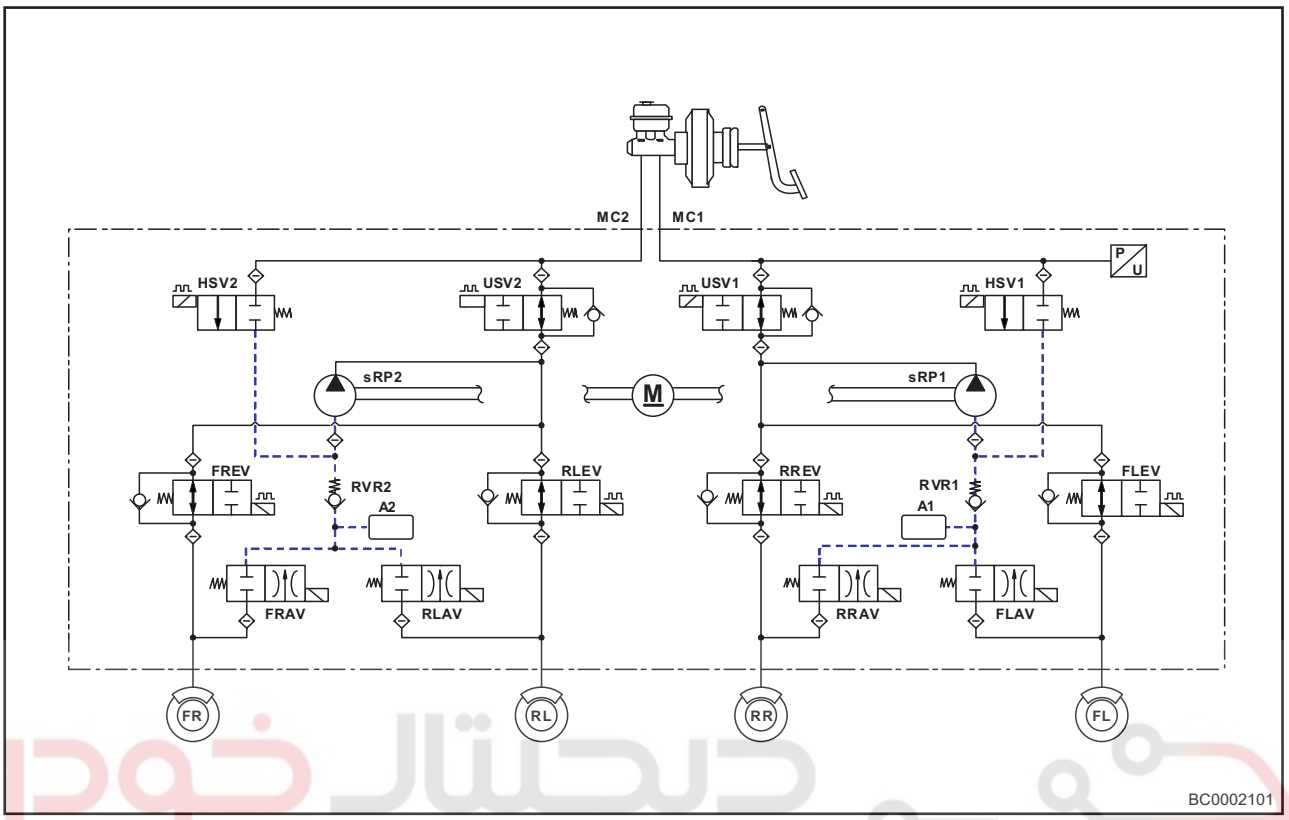

Description	Definition	Description	Definition
MC1	Brake Master Cylinder Circuit 1	FLEV	Front Left Wheel Inlet Valve
MC2	Brake Master Cylinder Circuit 2	FLAV	Front Left Wheel Outlet Valve
M	Motor	FREV	Front Right Wheel Inlet Valve
RP1	Return Pump 1	FRAV	Front Right Wheel Outlet Valve
RP2	Return Pump 2	FLEV	Rear Left Wheel Inlet Valve
A1	Accumulator 1	RLAV	Rear Left Wheel Outlet Valve
A2	Accumulator 2	RREV	Rear Right Wheel Inlet Valve
FL	Front Left Wheel	RRAV	Rear Right Wheel Outlet Valve
FR	Front Right Wheel	HSV1	High Pressure Switch Valve 1
RL	Rear Left Wheel	HSV2	High Pressure Switch Valve 2
RR	Rear Right Wheel	USV1	Circuit Control Valve 1
UP	Pressure Sensor	USV2	Circuit Control Valve 2

(a) General Brake Operating Condition

For vehicles equipped with ABS, if brake pressure applied to wheels is not enough to lock wheels, oil pressure generated by master cylinder will be transmitted to wheel cylinder through normal open valve, producing regular braking effect. "When it is not necessary to continue braking, and if driver reduces pressure to brake pedal, brake fluid of each wheel returns to master cylinder and brake pressure decreases."

Solenoid Valve	Powered Condition	Solenoid Valve Condition
Normal Open Valve	OFF	On
Normal Close Valve	OFF	OFF

WWW.DIGITALKHODRO.COM 021 62 99 92 92

WWW.DIGITALKHODRO.COM 021 62 99 92 92

(b) ABS/ESP Operating (Relief) Condition
For vehicles equipped with ABS/ESP, if brake pressure is applied excessively, friction coefficient between wheels and road will decrease, and wheels will be decelerated earlier than vehicle, which could cause wheels to lock. In this case, ABS/ESP control module transmits the command that reduces wheel pressure to hydraulic control module. In other words, normal open valve cuts off oil passage and the oil passage of normal close valve is open, in order to reduce wheel cylinder pressure. At this time, brake fluid drained from wheel cylinder is temporarily stored in low pressure accumulator. Then, the brake fluid stored in low pressure accumulator returns to master cylinder with rotation of motor.

Solenoid Valve	Powered Condition	Solenoid Valve Condition
Normal Open Valve	ON	OFF
Normal Close Valve	ON	On

(c) ABS/ESP Operating (Maintaining) Condition
When appropriate pressure is applied to wheel cylinder by boosting or relieving pressure, ABS system enters maintaining pressure state. In other words, normal open valve cuts off oil passage and normal close valve also cuts off oil passage, the wheel cylinder pressure is maintained.

Solenoid Valve	Powered Condition	Solenoid Valve Condition
Normal Open Valve	OFF	On
Normal Close Valve	OFF	OFF

(d) ABS/ESP Operating (Boost) Condition
When relieving pressure condition, if brake fluid is drained excessively or friction coefficient between wheels and road increases, it needs to increase each wheel pressure. In this case, ABS/ESP control module transmits the command that increases wheel pressure to hydraulic control module. Normal open valve open oil circuit and normal open valve cut off oil circuit. Brake fluid stored in low pressure accumulator is supplied to each wheel cylinder through master cylinder and normal open valve to boost pressure it each wheel cylinder.

Solenoid Valve	Powered Condition	Solenoid Valve Condition
Normal Open Valve	OFF	On
Normal Close Valve	OFF	OFF

ABS system operates circularly under relief, maintaining and boost pressure conditions until vehicle is completely stopped, so vehicle braking and steering performance will be guaranteed. ESP adjustment procedure is similar to ABS adjustment procedure. Brake fluid is supplied to wheel cylinders that need to increase pressure by pump, when stability control are realized and HSV valve opens and USV valve closes.

WWW.DIGITALKHODRO.COM 021 62 99 92 92

WWW.DIGITALKHODRO.COM 021 62 99 92 92

Hill Descent Control (HDC)

HDC system is a hill descent control system, which can help driver downhill in low speed and without brake intervention by driver actively.

No.	Function	Operation Method	Precautions
1	Function on	Press HDC switch button on auxiliary fascia console manually, functional indicator of meter and operation indicator of button turn on. (Green car icon light on meter turns on, switch indicator turns on).	Speed range of function on is between 0 and 60 km/h; HDC function is invalid when ESP system is malfunctioning.
2	Function off	Manually off: Press HDC switch button on auxiliary fascia console manually again, functional indicator of meter and operation indicator of button turn off. (Green car icon light on meter turns off, switch indicator turns off). Automatically off: When vehicle speed is higher than 60 km/h or system has a malfunction, function turns off automatically.	-
3	Functional roles	After function turns on, automatic gear vehicle can perform vehicle speed control within in 8 to 60 km/h, manual gear vehicle can perform vehicle speed control within in 14 to 60 km/h; If initial speed is lower than minimum or higher than maximum controlling speed, vehicle will perform control with minimum or maximum controlling speed acquiescently; Current controlling speed can be increased or decreased in given speed interval by depressing accelerator pedal or brake pedal.	This function applies brake actively via ESP increases pressure actively, at this time there is hydraulic operating sound, and it is normal.

Indicators and Warning Lights

No.	Function	Operation Method	Precautions
1	Green HDC indicator remains on	Function turns on normally	Function turns on normally
2	Green HDC indicator intermittently on	HDC function works	Function turns on normally
3	Yellow ESP light remains on	ESP is malfunctioning, HDC function can not turn on	It is suggested to check and repair by Chery dealer

Caution:

- When HDC system is operating, ABS will be activated automatically if wheel is locked.
- When HDC system is operating, brake force will be distributed to wheel with higher attachment coefficient if any wheel loses contact with ground.
- When HDC system is operating, for safety, driver must make preparations to control vehicle any time. Because system may be overheating or ESP system malfunction will occur except it is locked by button. At this time system will exit control automatically, driver needs to control speed timely instead of HDC.

WWW.DIGITALKHODRO.COM 021 62 99 92 92

WWW.DIGITALKHODRO.COM 021 62 99 92 92

Specifications

Torque Specifications

Description	Torque (N·m)
Wheel Mounting Bolt	110 ± 10
Fixing Nut Between ABS/ESP Control Module Assembly and Mounting Bracket	8 ± 2
Fixing Bolt Between ABS/ESP Control Module Assembly Mounting Bracket and Body	23 ± 3.5
Front Wheel Speed Sensor Fixing Bolt	9 ± 1.5
Rear Wheel Speed Sensor Fixing Bolt	9 ± 1.5
Coupling Bolt Between Brake Pipe and ABS/ESP Control Module Assembly	16 ± 2

Tool

Special Tool

Diagnostic Tester	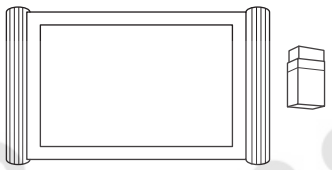 001

General Tool

Digital Multimeter	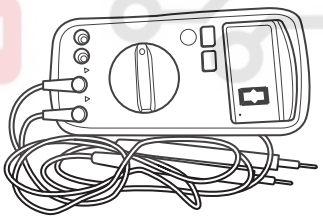 002

دیجیتال خودرو
شرکت دیجیتال خودرو سامانه (مسئولیت محدود)
اولین سامانه دیجیتال تعمیرکاران خودرو در ایران

Technical Parameters Table

Vehicle Model	Chery T18 (EPB) ESP9
Brake Fluid Type	DOT4
Number of Front Shaft Ring Gear Teeth	48
Number of Rear Shaft Ring Gear Teeth	48
Tire Type	215/60R17, 225/65R17, 235/55R18
Spare Tire Type	T125/80R17

WWW.DIGITALKHODRO.COM 021 62 99 92 92

WWW.DIGITALKHODRO.COM 021 62 99 92 92

DIAGNOSIS & TESTING

Diagnostic Contents

Problem Symptoms Table

Hint:

Use symptoms table below to help determine cause of problem. Check each suspected area in sequence. Repair or adjust faulty components, or replace as necessary.

Symptom	Suspected Area
When turning ENGINE START STOP switch ON, ABS/ESP warning light does not come on	Fuse
	Wire harness or connector
	ABS/ESP control module assembly
	Instrument cluster
ABS/ESP warning light remains on	Fuse
	Wire harness or connector
	ABS/ESP control module assembly
	Instrument cluster
ABS/ESP operation is abnormal	Wheel speed sensor (damaged, improperly installed, foreign matter attached)
	Hub ring gear (damaged, improperly installed, foreign matter attached)
	Hub ring gear (damaged, improperly installed, foreign matter attached)
	Brake line (blocked or leaked)
	Wire harness or connector
	ABS/ESP control module assembly
Communication with ABS/ESP control module assembly cannot be performed	Fuse
	Wire harness or connector
	Diagnostic tester
	ABS/ESP control module assembly

شرکت دیجیتال خودرو سامانه (مسئولیت محدود)
سامانه دیجیتال تعمیرکاران خودرو در ایران

WWW.DIGITALKHODRO.COM 021 62 99 92 92

WWW.DIGITALKHODRO.COM 021 62 99 92 92

Failure Analysis Table

ESP System Inspection Table

Technicians:

Owner's Name		Vehicle Model	
Contact Number		VIN	
Delivery Time		Driving Distance	

Malfunction Occurrence	Date of Occurrence	
	Frequency of Occurrence	☐ Always ☐ Sometimes
	Condition of Occurrence	
	Current Vehicle Speed	☐ When vehicle is stationary ☐ When vehicle drives to km/h
	Conventional Brake System	☐ Normal ☐ Abnormal (Symptoms:)
	Battery Voltage	
Malfunction Symptom	☐ EBD operates well ☐ Poor operation ☐ Does not operate	
	☐ ABS operates well ☐ ABS operates well ☐ ABS operates well	
	☐ ESP operates well ☐ ESP operates well ☐ ESP operates well (including TCS)	
	☐ EBD warning light	☐ Constants on ☐ Does not come on
	☐ ABS warning light	☐ Constants on ☐ Does not come on
	☐ ESP warning light	☐ Constants on ☐ Does not come on
DTC Check	Warranty status	☐ No DTC ☐ Current DTC (DTC code:) ☐ History DTC (DTC code:)
	After clearing DTCs and performing running test	☐ No DTC ☐ Current DTC (DTC code:) ☐ History DTC (DTC code:)

شرکت دیجیتال خودرو پارسیان (مسئولیت محدود)
اولین سامانه دیجیتال تعمیرکاران خودرو در ایران

WWW.DIGITALKHODRO.COM 021 62 99 92 92

WWW.DIGITALKHODRO.COM
021 62 99 92 92

Diagnosis Procedure

Hint:

Use following procedures to troubleshoot the brake control system.

1	Vehicle brought to workshop

Result

Proceed to
Next

Next

2	Check battery voltage

Check if battery voltage is normal.

OK

Standard voltage: Not less than 12 V

Result

Proceed to
OK
NG

NG → Check and repair battery

OK

دیجیتال خودرو
شرکت دیجیتال خودرو سامانه (مسئولیت محدود)
اولین سامانه دیجیتال خودرو در ایران

3	Customer problem analysis

Result

Proceed to
Next

Next

4	Check and clear DTCs

Result

Proceed to
Next

Next

WWW.DIGITALKHODRO.COM
021 62 99 92 92

WWW.DIGITALKHODRO.COM 021 62 99 92 92

5	Confirm and duplicate malfunction: accelerate vehicle to 40 km/h or above, simulate malfunction conditions and read DTCs again

Result

Proceed to
No DTC
Current DTC
History DTC

History DTC

6	Problem Repair (No DTC)

Result

Proceed to
Next

Next → Go to step 8

7	Troubleshoot according to Diagnostic Trouble Code (DTC) chart

Result

Proceed to
Next

Next → Go to step 8

8	Troubleshoot according to Problem Symptoms Table

Result

Proceed to
Next

Next

9	Conduct test and confirm malfunction has been repaired

Result

Proceed to
Next

Next → End

شرکت دیجیتال خودرو سامانه (مسئولیت محدود)
اولین سامانه دیجیتال تعمیرگاه خودرو در ایران

WWW.DIGITALKHODRO.COM 021 62 99 92 92

WWW.DIGITALKHODRO.COM 021 62 99 92 92

Problem Repair (No DTC)

If there is a problem in brake system, but no DTC is stored in ABS/ESP control module assembly, this problem is called a problem without DTC. A problem without DTC is caused by basic brake system malfunction. For example:

1. Brake fluid leakage (it may result in weak braking, brake pedal overtravel or even ineffective braking).
2. Using inferior brake fluid (it can result in corrosion of brake line and ABS hydraulic regulating module internal elements, or even ineffective braking).
3. Air in brake line (it may result in weak braking or even ineffective braking).
4. Brake line blockage (it may result in hard braking or even ineffective braking).
5. Excessive wear of brake disc (it may result in weak braking, brake pedal overtravel).
6. Brake booster malfunction (it may result in weak or hard braking, brake pedal overtravel or even ineffective braking).
7. Wrong brake line connection (it may result in ABS/ESP braking performance decreasing, drift, long braking distance etc.).

   Hint:
   - ABS/ESP no power supply or power supply abnormality will cause ABS/ESP warning light remains on without storing DTC.
   - Troubleshooting method: check corresponding component according to the malfunction, repair or replace as necessary.

DTC Confirmation Procedure

Confirm that battery voltage is normal before performing following procedures.

- Turn ENGINE START STOP switch to OFF.
- Connect the diagnostic tester (the latest software) to Data Link Connector (DLC).
- Turn ENGINE START STOP switch to ON.
- Using diagnostic tester, record and clear DTCs stored in ABS/ESP control module assembly.
- Turn ENGINE START STOP switch to OFF and wait several seconds.
- Start engine, drive vehicle at 40 km/h or more and perform road test with diagnostic tester connected to Data Link Connector (DLC).
- Use diagnostic tester to read DTCs.
- If DTC is detected, malfunction indicated by DTC is current. Go to diagnosis procedure - Step 1.
- If no DTC is detected, malfunction indicated by DTC is intermittent Please refer to Intermittent DTC Troubleshooting.

Intermittent DTC Troubleshooting

If malfunction is intermittent, perform the followings:

- Check if connector is loose.
- Check if wire harness is worn, pierced, pinched or partially broken.
- Wiggle related wire harness and connector and observe if signal in related circuit is interrupted.
- If possible, try to duplicate conditions under which DTC was set.
- Look for data that has changed or DTC to reset during wiggle test.
- Check for broken, bent, protruded or corroded terminals.
- Inspect wheel speed sensors and mounting areas for damage, foreign matter, etc. that will cause incorrect signals.
- Check and clean all wire harness connectors and ground parts related to DTC.
- If multiple trouble codes were set, refer to circuit diagrams to look for any common ground circuit or power supply circuit applied to DTC.
- Refer to any Technical Bulletin that may apply to this malfunction.

WWW.DIGITALKHODRO.COM 021 62 99 92 92

WWW.DIGITALKHODRO.COM 021 62 99 92 92

Ground Inspection

Ground points are very important to the proper operation of circuits. Ground points are often exposed to moisture, dirt and other corrosive environments. Corrosion (rust) may increase load resistance. This situation may change the way in which a circuit works. Circuits are very sensitive to proper grounding. A loose or corroded ground can affect the control circuit. Check the ground points as follows:

1. Remove ground bolt or nut.
2. Check all contact surfaces for tarnish, dirt and rust, etc.
3. Clean as necessary to ensure that contacting is in good condition.
4. Reinstall ground bolt or nut securely.
5. Check if add-on accessories interfere with ground circuit.
6. If several wire harnesses are crimped into one ground terminal, check for proper crimps. Make sure that all wire harnesses are clean and securely fastened while providing a good ground path.

ABS/ESP Control Module Assembly Terminal List (EPB)

Connector Terminal

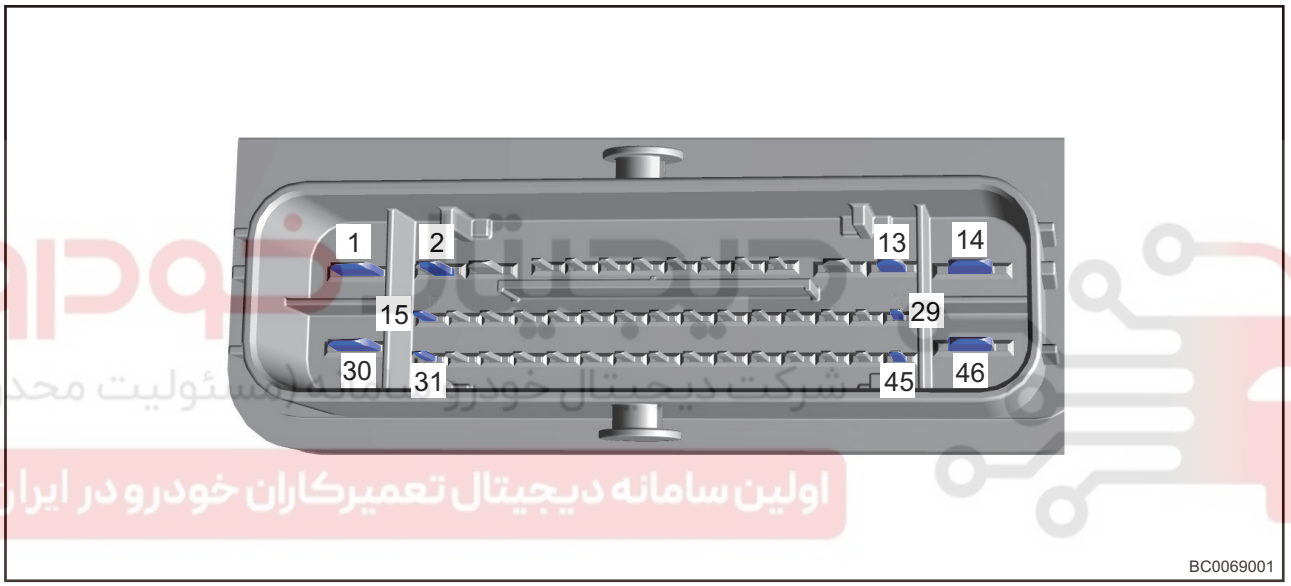

شرکت دیجیتال خودرو سامانه (مسئولیت محدود)
اولین سامانه دیجیتال تعمیرکاران خودرو در ایران

Terminal No.	Terminal Definition	Terminal No.	Terminal Definition
1	Motor Power Supply End (Positive)	24	Wheel Speed Sensor Signal End (Front Left)
2	Right Motor Positive	25	CAN2 Low
3	Right Motor Negative	26	Wheel Speed Sensor Signal End (Front Right)
4	-	27	-
5	CAN1 High	28	-
6	-	29	-
7	Wheel Speed Sensor Signal Terminal (Front Left)	30	Valve Relay Power Supply Terminal
8	AVH Indicator	31	APB Switch (3)
9	Vehicle Speed Output	32	APB Switch (1)
10	HID Indicator	33	-
11	CAN2 High	34	Front Right Wheel Speed Output
12	Left Motor Negative	35	-
13	Left Motor Positive	36	ECU Power Supply Terminal (Ignition Power Supply Wire)
14	Motor Ground Terminal	37	Wheel Speed Sensor Signal Terminal (Rear Right)
15	APB Switch (4)	38	Brake Light Switch

WWW.DIGITALKHODRO.COM 021 62 99 92 92

WWW.DIGITALKHODRO.COM
021 62 99 92 92

Terminal No.	Terminal Definition	Terminal No.	Terminal Definition
16	APB Switch (2)	39	Wheel Speed Sensor Power Supply Terminal (Rear Left)
17	HID Switch	40	-
18	APB Indicator	41	AVH Switch
19	CAN 1 Low	42	-
20	-	43	ESP OFF
21	Wheel Speed Sensor Power Supply Terminal (Front Right)	44	-
22	Wheel Speed Sensor Power Supply Terminal (Rear Right)	45	-
23	Wheel Speed Sensor Signal Terminal (Rear Left)	46	ECU Ground Terminal

Diagnostic Tester Menu Function and Date Flow

1. Diagnostic menu options
   Tiggo 8/T18 → ABS/ESP
2. Reading Version Information function menu
   As shown in figure:

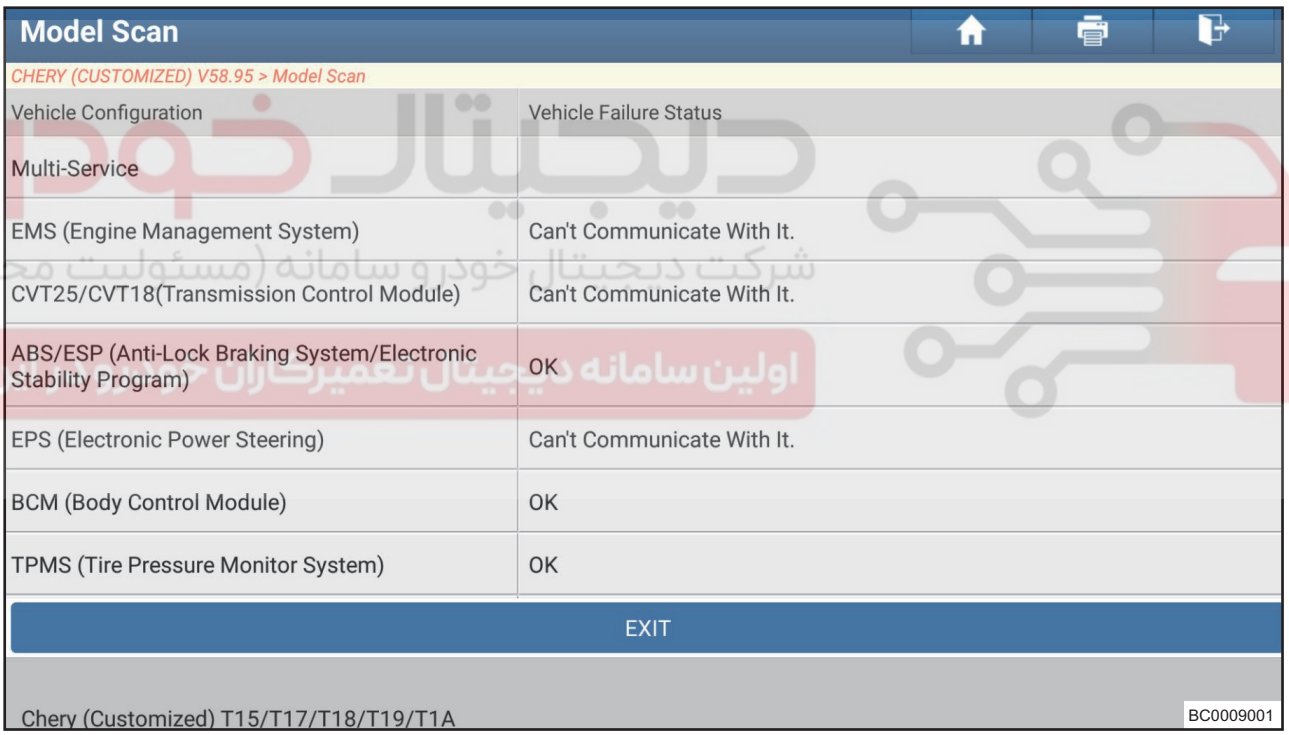

WWW.DIGITALKHODRO.COM
021 62 99 92 92

WWW.DIGITALKHODRO.COM 021 62 99 92 92

3. ABS (Antilock Brake System)/ESP (EPB) (Electronic Stability Program) function menu
As shown in figure:

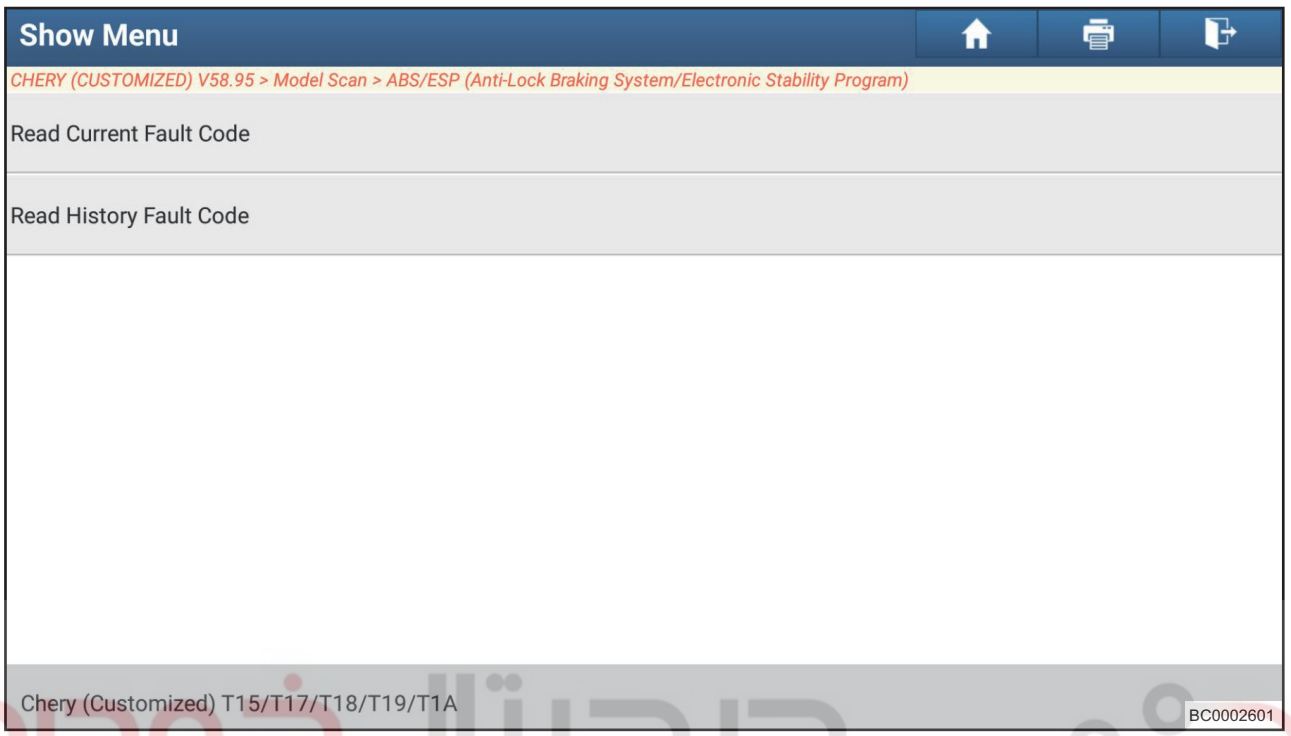

Read Fault Code: Read the current and history DTCs
Clear Fault Memory: Clear the current and history DTCs

4. Reading data flow function
It is used to read the data flow related to controller, data is as follows:
(a) Hydraulic module filling status: After vacuum pumping/filling brake fluid operation completes, "Filling Is Completed and Succeeded" will be displayed. After vacuum pumping of brake fluid, service technicians should select "Write E&F Process Control Byte" menu and write it into this status.
(b) Off-line detection status: After vacuum pumping/filling completes, production line facility writes this status "Off-line Inspection finished sucessfully" into controller automatically.
(c) Wheel speed: When vehicle is stopped, vehicle speed becomes 0; when vehicle is driven straight, speed of four wheels is basically the same.
Front left wheel speed: km/h;
Front right wheel speed: km/h;
Rear left wheel speed: km/h;
Rear right wheel speed: km/h;
(d) Solenoid valve and pump motor:
ESP valve status (only for ESP): Activated/Not activated;
Valve relay status: Activated/Not activated;
Pump motor status: Activated/Not activated;
When valve or motor operates, activated is displayed.
(e) Brake pedal switch:
Activated is displayed when brake pedal is depressed; Not activated is displayed when brake pedal is released.
(f) Steering angle sensor (only for ESP): Deg
With vehicle driven straight and steering wheel centered, read the angle value is within ± 5°.

WWW.DIGITALKHODRO.COM 021 62 99 92 92

WWW.DIGITALKHODRO.COM 021 62 99 92 92

(g) Acceleration:
Lateral acceleration (only for ESP): m/s^2
Longitudinal acceleration (only for ESP): m/s^2
Yaw rate (only for ESP): rad/s
If vehicle has acceleration, lateral acceleration, longitudinal acceleration and yaw rate will be displayed.

(h) Master cylinder pressure (only for ESP): bar
When brake pedal is depressed, pressure value not from brake master cylinder will be displayed.

(i) Power supply voltage: V, same as the battery voltage value.

(j) Vehicle speed: km/h.

(k) Configuration information: Software configuration bar code: 2-digit configuration code.
Software configuration information (only for ESP): Configuration code represents the vehicle configuration, such as engine, transmission and tires, etc.

5. Special Operation menu
There are 14 functions, the menu is as shown in illustration:

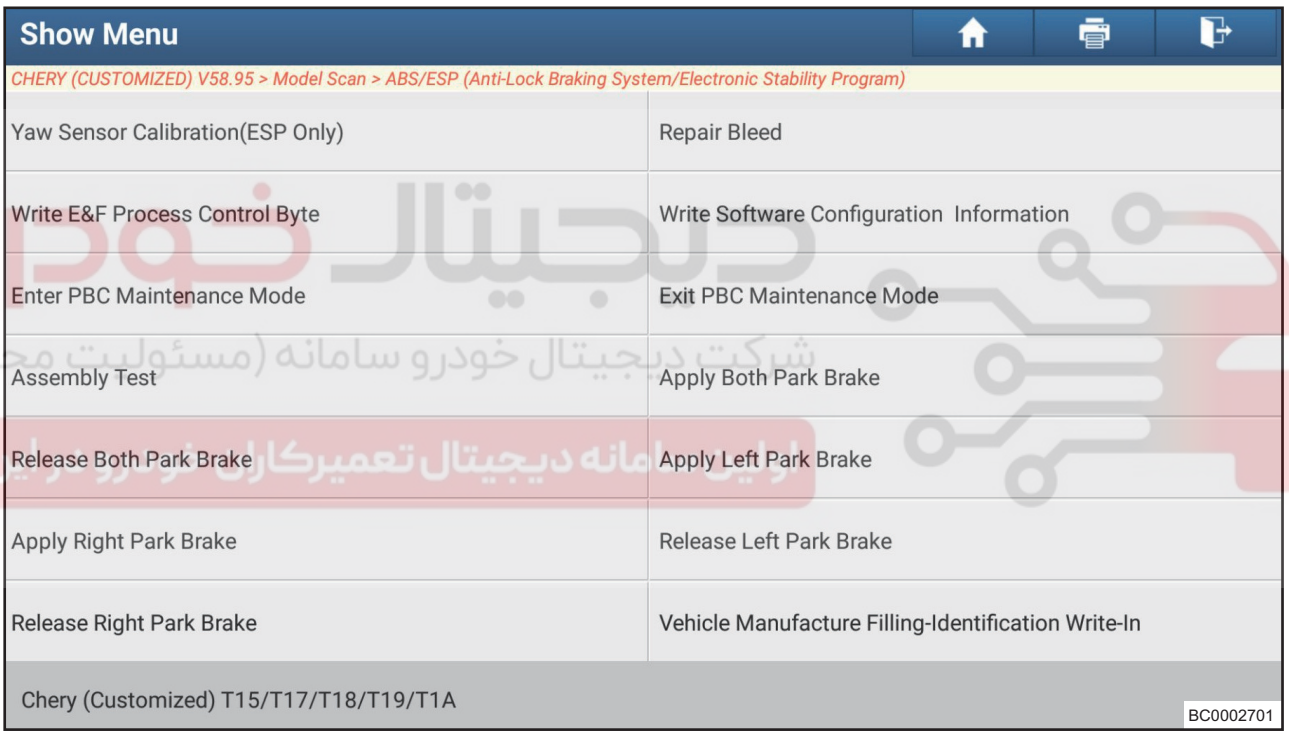

(a) Yaw rate sensor calibration (only for ESP)
When removing and installing / replacing ESP assembly or if DTC code for yaw rate sensor occurs, it is necessary to to use this menu to perform yaw rate sensor calibration.
Calibration condition: Refer to Yaw Rate Sensor Calibration.
Caution:
- When replacing ESP, integrated sensor calibration must be performed. During calibration, ECU will write the measured new data into EEPROM for use by ESP. Ensure the above calibration conditions are right, because ESP cannot determine whether the above mentioned preconditions are proper or not. If offset is too large, system will reject the calibration. In the case, it is necessary to repair the vehicle.

WWW.DIGITALKHODRO.COM 021 62 99 92 92

WWW.DIGITALKHODRO.COM 021 62 99 92 92

(b) Manual bleeding
For all failed vacuum pumping/filling processes used in production line, or if service replacement part is dry-type ABS/ESP, manual bleeding must be performed in accordance with this procedure. To reach sufficient pressure in hydraulic regulator, brake pedal needs to be depressed repeatedly during whole draining process.
Operating method: Operates according to prompt on diagnostic tester. Note: Usually, service spare part is dry-type ABS/ESP assembly and this menu needs to be used.

(c) Write vacuum pumping and filling status
Use this menu to write E & F process control byte after bleeding operation is performed by service technicians or manual bleeding for production line is performed.
After service technicians performs bleeding, perform this menu to write "adding is finished sucessfully".

Description	Refer to
Enter into parking brake control system maintenance mode	Refer to ELECTRONIC PARKING BRAKE SYSTEM
Exit parking brake control system maintenance mode	
Assembly inspection	
Rear brake caliper clamps at the same time	
Rear wheel speed sensor fixing bolt	
Rear brake caliper releases at the same time	
Rear left brake caliper clamps	
Rear right brake caliper clamps	
Rear left brake caliper releases	
Rear right brake caliper releases	

Reading Data Flow Function of Steering Angle Sensor

6. Steering Angle status: Steering angle has calibrated

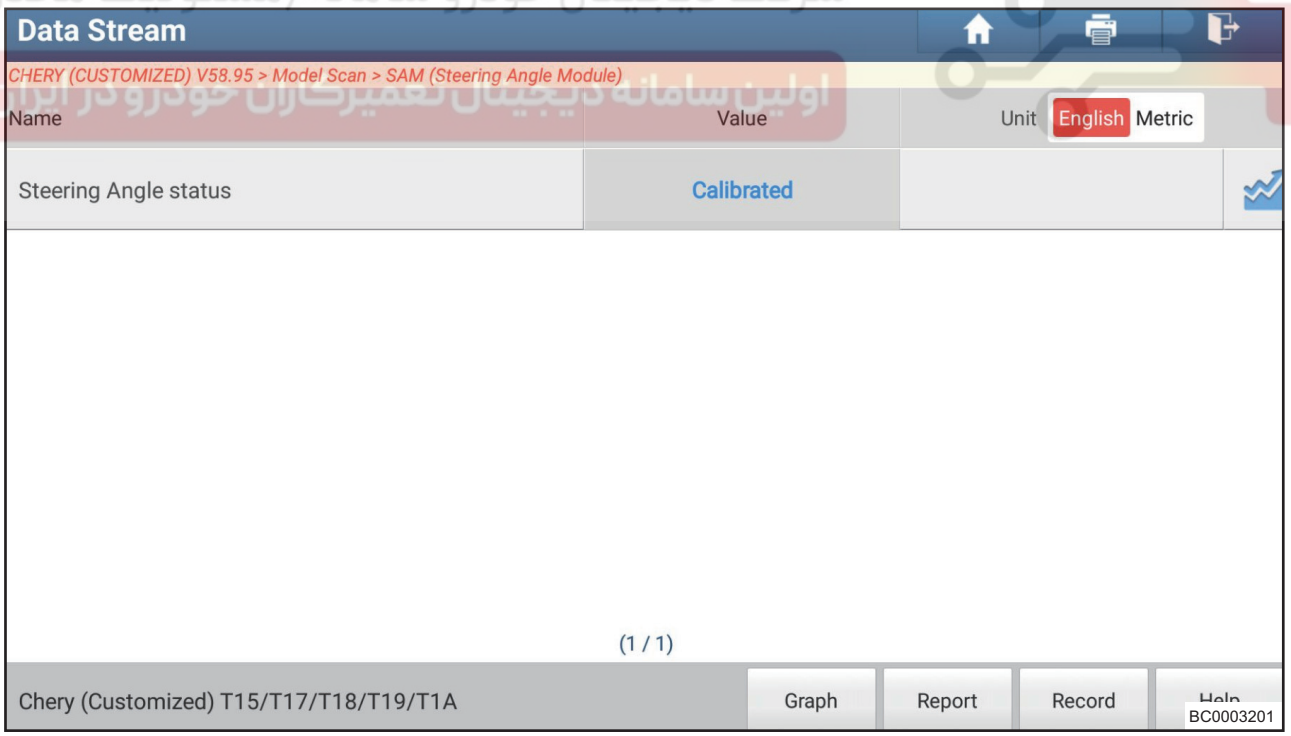

WWW.DIGITALKHODRO.COM 021 62 99 92 92

WWW.DIGITALKHODRO.COM
021 62 99 92 92

Calibration

1. Calibrating Steering Angle Sensor

Prerequisites for sensor calibration:

- Perform zero point calibration after steering angle sensor is installed.
- Calibration should be performed at front (four) wheel alignment station (make sure that the four wheel alignment parameters are correct).
- Before calibrating, straighten up the vehicle and wheels must be in straight lines along proceeding direction. Difference between the two angles should meet toe-in of four wheel alignment parameters value. Steering wheel must be adjusted to center.
- Before calibrate a calibrated sensor again, always calibrate it again to make it return uncalibrated state.

Caution:

Steering wheel must be centered in the actual calibration. If not, even correct data can cause wrong calibration when performing four wheel alignment. This problem may not be detected at factory. Long-term cumulative errors may be caused or over range phenomenon may occur when turn steering wheel fully during actual driving. Therefore, when performing four wheel alignment, the steering wheel should be centered.

Operation step:

1. Connect the diagnostic tester.
2. Turn ENGINE START STOP switch to ON.
3. Place the steering wheel to center position (straighten up the vehicle, wheels must be in straight lines along proceeding direction, and center steering wheel).
4. Power should not be cut during calibration.
5. Use diagnostic tester to enter T18 "SAM (Steering Angle Module)", then click "SAS Calibration".

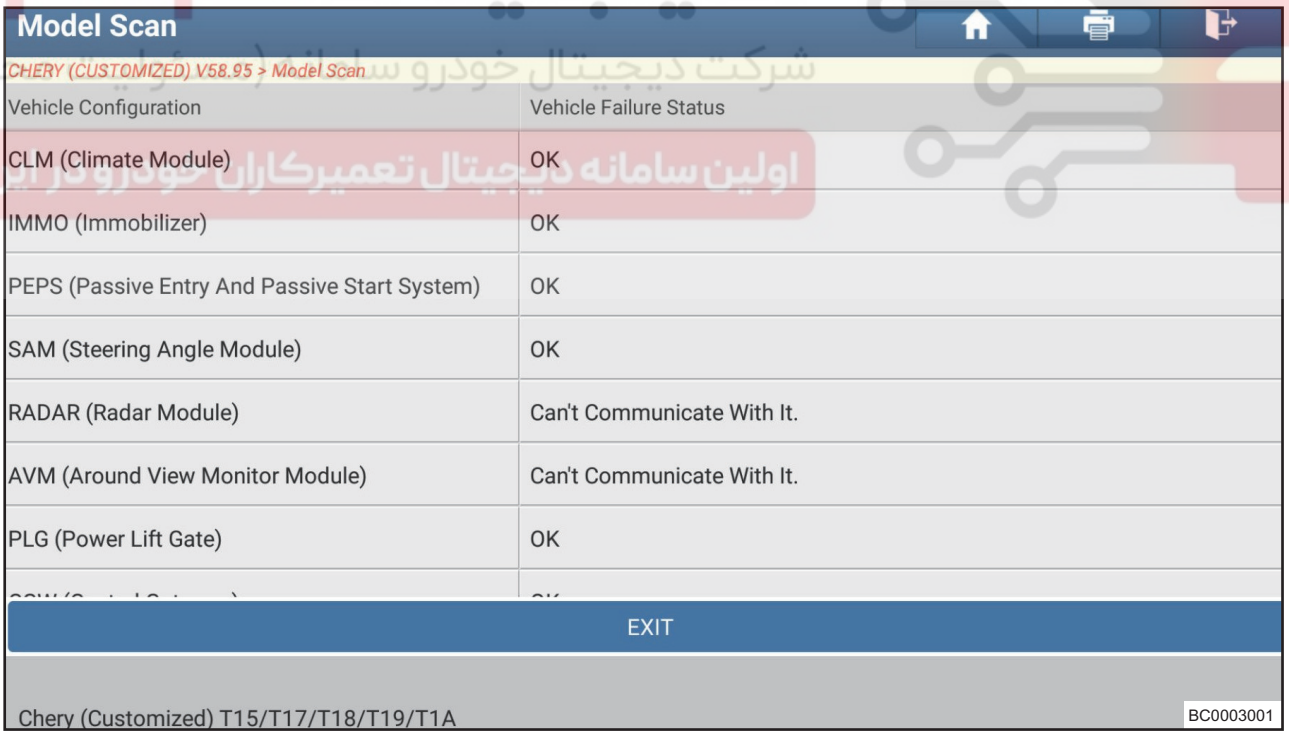

WWW.DIGITALKHODRO.COM
021 62 99 92 92

WWW.DIGITALKHODRO.COM 021 62 99 92 92

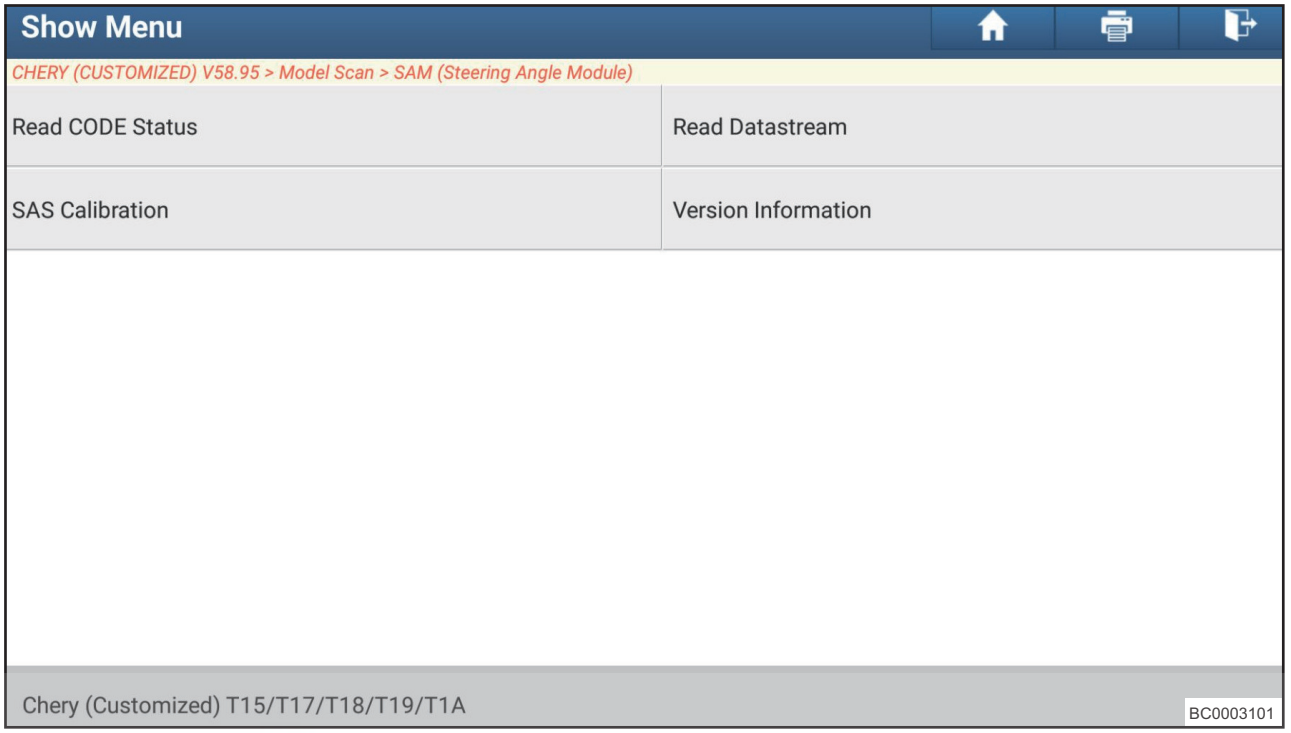

6. Diagnostic tester will detect sensor malfunction and calibration automatically; if sensor has malfunction, it will exit calibration.
7. If sensor is not calibrated, click "OK" to perform calibration.
8. If sensor has been calibrated, "Recalibration" will be prompted. In this case, click "Recalibration" according to prompt on diagnostic tester and then click "Initial Calibration". If there is no response, it will exit calibration.
9. Diagnostic tester will prompt whether calibration is success or not.

Warning:
Never cut off the power during calibration. (Power applied to equipment and steering angle sensor must not be cut off during calibration. Also, diagnostic tester and sensor must be connected properly. Otherwise, calibration cannot be performed properly. If any of them are connected poorly, electrical overload of the products can be caused worst of all.)

Caution:
The steering angle sensor should to be calibrated again after four wheel alignment are performed.

2. Calibrating Yaw Rate Sensor

Prerequisites for sensor calibration:
- Calibration can be performed on rotary hub tester or a flat area.
- Maximum tilting angle of tester must be within allowable range, that both are met ± 0.57° (± 1%) in two positive directions.
- The tester must be stationary.
- Turn steering wheel to straight ahead position.
- Tire pressure is proper.
- Vehicle load is normal.
- Less remaining fuel in fuel tank is allowable.
- Vehicle stands on its own wheels.
- Only driver sits in vehicle.
- Additional interference is prohibited, such as vibration due to opening or closing hood etc.

WWW.DIGITALKHODRO.COM 021 62 99 92 92

WWW.DIGITALKHODRO.COM
021 62 99 92 92

Caution:
When replacing ABS/ESP module, integrated sensor must be calibrated. During calibration, ECU will write the measured new data into the EEPROM for use by ESP. Ensure the above calibration conditions are right, because ESP cannot determine whether the above mentioned preconditions are proper or not. If offset is too large, system will reject the calibration. In the case, it is necessary to repair the vehicle.

Operation step:

1. Connect the diagnostic tester.
2. Turn ENGINE START STOP switch to ON.
3. Make sure vehicle tilt angle is in range of ± 0.57° (± 1%).

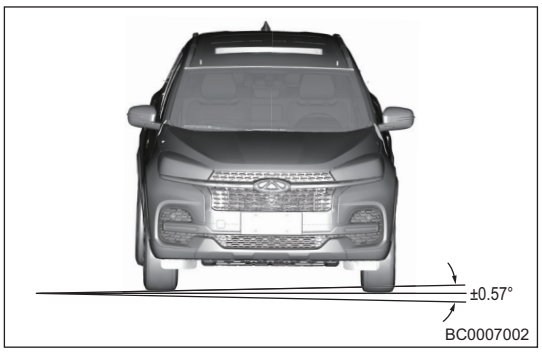

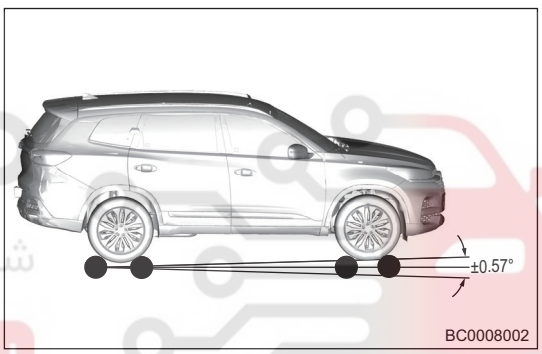

دیجیتال خودرو
شرکت دیجیتال خودرو سامانه (مسئولیت محدود)
اولین سامانه دیجیتال تعمیر

4. Enter menu "ABS".

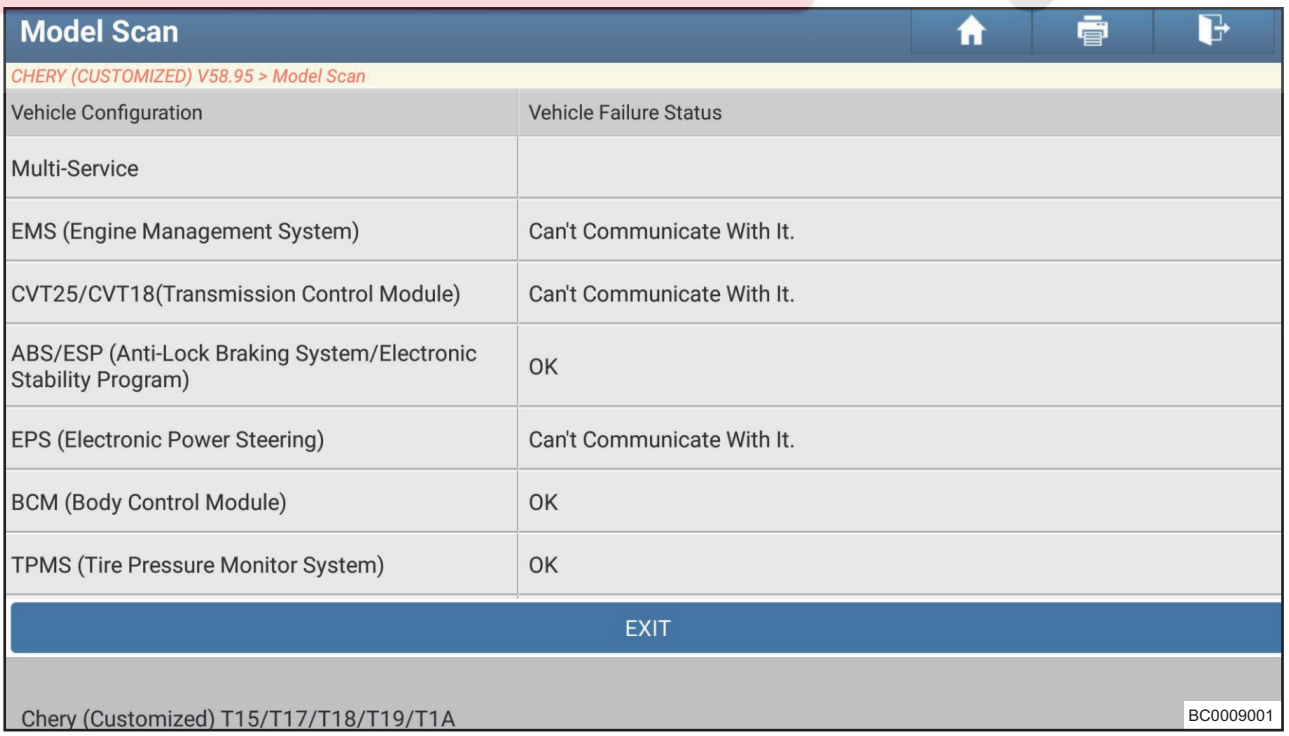

Model Scan

CHERY (CUSTOMIZED) V58.95 > Model Scan

Vehicle Configuration	Vehicle Failure Status
Multi-Service	
EMS (Engine Management System)	Can't Communicate With It.
CVT25/CVT18(Transmission Control Module)	Can't Communicate With It.
ABS/ESP (Anti-Lock Braking System/Electronic Stability Program)	OK
EPS (Electronic Power Steering)	Can't Communicate With It.
BCM (Body Control Module)	OK
TPMS (Tire Pressure Monitor System)	OK

EXIT

Chery (Customized) T15/T17/T18/T19/T1A

BC0009001

WWW.DIGITALKHODRO.COM
021 62 99 92 92

WWW.DIGITALKHODRO.COM 021 62 99 92 92

5. Click "Special function".

6. Click "Yaw Sensor Calibration (ESP only)".

Warning:
Never cut off the power during calibration. (Power applied to equipment and steering angle sensor must not be cut off during calibration. Also, diagnostic tester and sensor must be connected properly. Otherwise, calibration cannot be performed properly. If any of them are connected poorly, electrical overload of the products can be caused worst of all.)

WWW.DIGITALKHODRO.COM 021 62 99 92 92

WWW.DIGITALKHODRO.COM
021 62 99 92 92

Diagnostic Trouble Code (DTC) Chart

DTC	DTC Definition
C0001-04	TCS Control Channel Changeover Valve1 (ESP Only)
C0002-04	TCS Control Channel Changeover Valve2 (ESP Only)
C0003-04	TCS Control Channel High Pressure Switch Valve1 (ESP Only)
C0004-04	TCS Control Channel High Pressure Switch Valve2 (ESP Only)
C0010-04	Left Front Inlet Control
C0011-04	Left Front Outlet Control
C0014-04	Right Front Inlet Control
C0015-04	Right Front Outlet Control
C0018-04	Left Rear Inlet Control
C0019-04	Left Rear Outlet Control
C001C-04	Right Rear Inlet Control
C001D-04	Right Rear Outlet Control
C0020-04	ABS Pump Motor Control
C0031-00	Left Front Wheel Speed Sensor Failures
C0031-09	Left Front Wheel Speed Sensor Failures
C0031-11	Left Front Wheel Speed Sensor Failures
C0031-12	Left Front Wheel Speed Sensor Failures
C0031-13	Left Front Wheel Speed Sensor Failures
C0031-29	Left Front Wheel Speed Sensor Failures
C0031-37	Left Front Wheel Speed Sensor Failures
C0034-00	Right Front Wheel Speed Sensor Failures
C0034-09	Right Front Wheel Speed Sensor Failures
C0034-11	Right Front Wheel Speed Sensor Failures
C0034-12	Right Front Wheel Speed Sensor Failures
C0034-13	Right Front Wheel Speed Sensor Failures
C0034-29	Right Front Wheel Speed Sensor Failures
C0034-37	Right Front Wheel Speed Sensor Failures
C0037-00	Right Front Wheel Speed Sensor Failures
C0037-09	Left Rear Wheel Speed Sensor
C0037-11	Left Rear Wheel Speed Sensor
C0037-12	Left Rear Wheel Speed Sensor
C0037-13	Left Rear Wheel Speed Sensor
C0037-29	Left Rear Wheel Speed Sensor
C0037-37	Left Rear Wheel Speed Sensor
C003A-00	Right Rear Wheel Speed Sensor
C003A-09	Right Rear Wheel Speed Sensor
C003A-11	Right Rear Wheel Speed Sensor
C003A-12	Right Rear Wheel Speed Sensor
C003A-13	Right Rear Wheel Speed Sensor
C003A-29	Right Rear Wheel Speed Sensor
C003A-37	Right Rear Wheel Speed Sensor
C0040-64	Brake Pedal Switch (ESP Only)
C0044-01	Brake Pressure Sensor (ESP Only)
C0044-28	Brake Pressure Sensor (ESP Only)
C0051-29	Steering Wheel Position Sensor (ESP Only)
C0051-54	Steering Wheel Position Sensor (ESP Only)
C0051-64	Steering Wheel Position Sensor (ESP Only)

WWW.DIGITALKHODRO.COM
021 62 99 92 92

WWW.DIGITALKHODRO.COM 021 62 99 92 92

DTC	DTC Definition
C0061-64	Lateral Acceleration Sensor (ESP Only)
C0062-64	Longitudinal Acceleration Sensor (ESP Only)
C0063-01	Yaw Rate Sensor (ESP Only)
C0063-54	Yaw Rate Sensor (ESP Only)
C0063-64	Yaw Rate Sensor (ESP Only)
C006B-00	Stability System Active Too Long
C0089-04	TCS Disable Switch (ESP Only)
C1000-16	ECU Voltage Supply
C1000-17	ECU Voltage Supply
C1001-04	ECU
C1002-49	CAN Hardware Internal Electronic Failure
C1003-04	Valve Relay
C1004-00	General Valve
C1007-29	Reverse Gear Switch (ESP Only)
C1007-29	Reverse Gear Switch (ESP Only)
C1008-00	General WSS
C1009-00	ECU Hard Ware Related
U0005-00	High Speed CAN Communication Bus (+) High
U0007-00	High Speed CAN Communication Bus (-) Low
U0073-88	Control Module Communication Bus Off
U0100-87	Lost Communication With Engine Control System Module
U0101-87	Lost Communication With Transmission Control Unit
U0126-87	Lost Communication With SAM
U0140-87	Lost Communication With Body Control Module
U0401-81	Invalid Data Received From Engine Control System Module
U0402-81	Invalid Data Received From Transmission Control Unit
U0422-81	Invalid Data Received From Body Control Module
U0428-81	Invalid Data Received From SAM
U1300-55	Software Configuration Error
C1800-93	Left Actuator
C1800-19	Left Actuator
C1800-74	Left Actuator
C1800-73	Left Actuator
C1800-72	Left Actuator
C1800-91	Left Actuator
C1800-92	Left Actuator
C1800-97	Left Actuator
C1801-93	Right Actuator
C1801-19	Right Actuator
C1801-74	Right Actuator
C1801-73	Right Actuator
C1801-72	Right Actuator
C1801-91	Right Actuator
C1801-92	Right Actuator
C1801-97	Right Actuator
C1802-44	PBC EEPROM Fault
C1802-17	Supply Voltage
C1802-16	Supply Voltage

WWW.DIGITALKHODRO.COM 021 62 99 92 92

WWW.DIGITALKHODRO.COM
021 62 99 92 92

DTC	DTC Definition
C1803-95	Assembly Test
C1804-53	Maintenance Mode
C1805-94	Hydric Support Failed
C1806-01	Apb Button Line Failure
C1806-04	Apb Button Always Pushed Or Pulled
C1824-01	APBActL_ElectricalFailure
C1825-01	APBActR_ElectricalFailure
C1822-00	APBActL_Failure
C1821-00	APBActR_Failure
C1824-1E	APBActL_ShuntOnLineOrECU
C1825-1E	APBActR_ShuntOnLineOrECU
C1830-00	APBActR_CAT
C1833-00	APBActR_UnintendedRun
C1831-00	APBActR_CAT
C186D-44	SupervisionFail
C1832-00	APBActL_UnintendedRun
C1806-16	APB Button Under Voltage
C1823-00	APB Motor Enable Line Violation
C1807-98	Disc Over Heat
C1826-01	APBActDriverGen_ElectricalFailure
C1808-12	APB left motor lines short circuit to Ubatt
C1808-11	APB left Motor lines short circuit to GND
C1808-13	APB Left Motor line interruption
C1815-12	APB right motor lines short circuit to Ubatt
C1815-11	APB right Motor lines short circuit to GND
C1815-13	APB right Motor line interruption
C0032-08	Wrong direction of Left Front Wheel Speed Sensor
C0035-08	Wrong direction of Left Rear Wheel Speed Sensor
C0038-08	Wrong direction of Right Front Wheel Speed Sensor
C003b-08	Wrong direction of Right Rear Wheel Speed Sensor
C1099-08	Wrong direction of Wheel Speed Sensor
C10AD-08	Vacuum Sensor General Fault
C156B-00	EPBASIC_GenericError
C1546-04	EPB_SupplyFault
U0104-04	Lost CommunicationWith ACC (ESP Only)
U0104-08	Invalid Data Received From ACC (ESP Only)
U1602-08	HAS_InvalidValue
U1600-08	APBSystemState_InvalidValue
U1605-0	ABANet_InvalidValue
U1606-08	ABPNet_InvalidValue
U1612-08	ACCNet_InvalidValue
U1607-08	AEBNet_InvalidValue
U1608-08	AWBNet_InvalidValue
U1615-08	AccPedalNet_InvalidValue
U1614-08	BTMNet_InvalidValue
U1610-08	CDDNet_InvalidValue
U1603-08	SClutch_InvalidValue
U1619-08	EngineNet_InvalidValue

WWW.DIGITALKHODRO.COM
021 62 99 92 92

WWW.DIGITALKHODRO.COM 021 62 99 92 92

DTC	DTC Definition
U1620-08	StartStopNet_InvalidValue
U1613-08	TCUNet_InvalidValue
U1609-08	VLCNet_InvalidValue
U1625-08	VacuumNet_InvalidValue

دیجیتال خودرو
شرکت دیجیتال خودرو سامانه (مسئولیت محدود)
اولین سامانه دیجیتال تعمیرکاران خودرو در ایران

WWW.DIGITALKHODRO.COM 021 62 99 92 92

WWW.DIGITALKHODRO.COM
021 62 99 92 92

DTC	C0001-04	TCS Control Channel Changeover Valve1 (ESP Only)
DTC	C0002-04	TCS Control Channel Changeover Valve2 (ESP Only)
DTC	C0003-04	TCS Control Channel High Pressure Switch Valve1 (ESP Only)
DTC	C0004-04	TCS Control Channel High Pressure Switch Valve2 (ESP Only)
DTC	C0010-04	Left Front Inlet Control
DTC	C0011-04	Left Front Outlet Control
DTC	C0014-04	Right Front Inlet Control
DTC	C0015-04	Right Front Outlet Control
DTC	C0018-04	Left Rear Inlet Control
DTC	C0019-04	Left Rear Outlet Control
DTC	C001C-04	Right Rear Inlet Control
DTC	C001D-04	Right Rear Outlet Control

WWW.DIGITALKHODRO.COM
021 62 99 92 92

WWW.DIGITALKHODRO.COM 021 62 99 92 92

Circuit Diagram

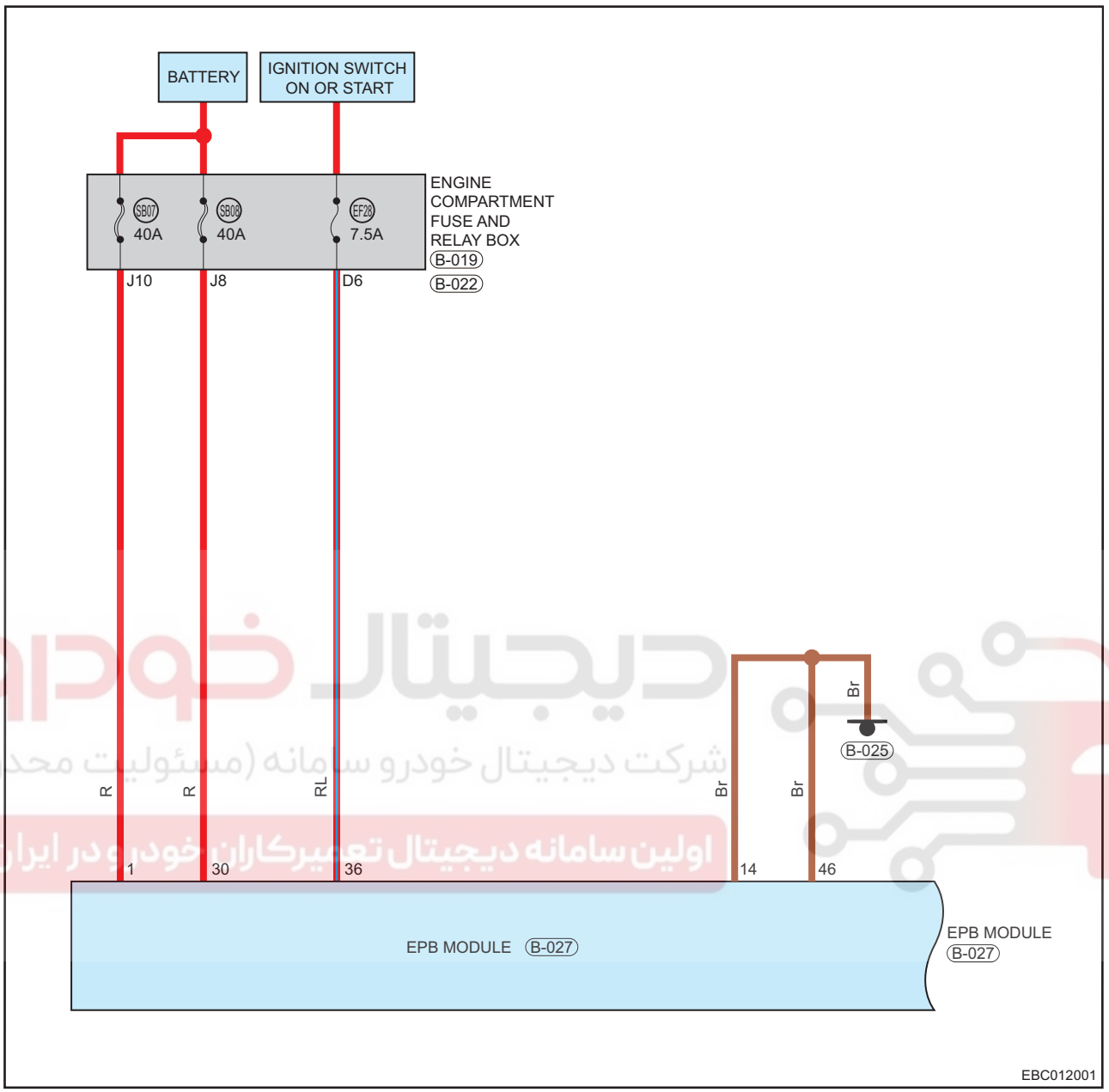

WWW.DIGITALKHODRO.COM 021 62 99 92 92

WWW.DIGITALKHODRO.COM 021 62 99 92 92

Description

DTC	DTC Definition	DTC Detection Condition	Possible Cause
C0001-04	TCS Control Channel Changeover Valve1 (ESP Only)	This DTC occurs when any of following conditions is met: • Valve power supply malfunction (short to ground in power supply or ground circuit open). • Solenoid valve temperature is too high (overheat protection). • Short circuit in more than 5 solenoid valves (fuses). • Corresponsive solenoid valve activated with no feedback. • Solenoid valve itself malfunction.	• Valve set relay malfunction. • Poor connection of ABS/ESP control module ground circuit • Fuse malfunctions • Solenoid valve short or open circuit itself • Overheat protection triggered • ABS/ESP control module assembly is damaged
C0002-04	TCS Control Channel Changeover Valve2 (ESP Only)		
C0003-04	TCS Control Channel High Pressure Switch Valve1 (ESP Only)		
C0004-04	TCS Control Channel High Pressure Switch Valve2 (ESP Only)		
C0010-04	Left Front Inlet Control		
C0011-04	Left Front Inlet Control		
C0014-04	Right Front Inlet Control		
C0015-04	Right Front Inlet Control		
C0018-04	Left Rear Inlet Control		
C0019-04	Left Rear Inlet Control		
C001C-04	Right Rear Inlet Control		
C001D-04	Right Rear Inlet Control		
C001D-04	Right Rear Outlet Control		

Caution:
When performing electrical equipment diagnosis and test, always refer to circuit diagram for related circuit and component information.

شرکت دیجیتال خودرو سامانه (مسئولیت محدود)
اولین سامانه دیجیتال تعمیرگاه خودرو در ایران

Procedure

1	Check for DTCs

(a) Leave vehicle for 5 minutes, clear and read ABS/ESP control module assembly DTC again with diagnostic tester.
(b) Refer to "DTC confirmation procedure".
(c) Check if the same DTCs are still output.

Result

Proceed to
OK
NG

NG → **Problem indicated by DTC is intermittent (system overheat protection)**

OK

2	Check fuse

(a) Turn ENGINE START STOP switch to OFF.
(b) Disconnect the negative battery cable.
(c) Remove the fuse SB-08 (40 A) from engine compartment fuse and relay box.
(d) Check if fuse is blown.

WWW.DIGITALKHODRO.COM 021 62 99 92 92

WWW.DIGITALKHODRO.COM 021 62 99 92 92

Result

Proceed to
OK
NG

NG → **Replace fuse SB-08**

OK ↓

3	Check wire harness and connector

Use circuit diagram as a guide to perform following procedures:

(a) Turn ENGINE START STOP switch to OFF.
(b) Disconnect the negative battery cable.
(c) Disconnect the ABS/ESP control module connector B-027.
(d) Check wire harness between terminal J08 of engine compartment fuse and relay box and terminal 30 of ABS/ESP control module assembly.
(e) Check if wire harnesses are worn, pierced, pinched or partially broken.
(f) Check for broken, bent, protruded or corroded terminals.
(g) Check if related connector terminals are in good condition.

Result

Proceed to
OK
NG

NG → **Repair or replace body wire harness and connector**

OK ↓

4	Check ABS/ESP control module power supply circuit (ABS/ESP control module assembly - power supply)

(a) Disconnect the negative battery cable.
(b) Turn ENGINE START STOP switch to OFF.
(c) Disconnect the ABS/ESP control module assembly connector B-027.

WWW.DIGITALKHODRO.COM 021 62 99 92 92

WWW.DIGITALKHODRO.COM
021 62 99 92 92

(d) Using a digital multimeter, measure the voltage between terminal 30 of ABS/ESP control module assembly and body ground to check if power supply circuit is normal according to the table below.

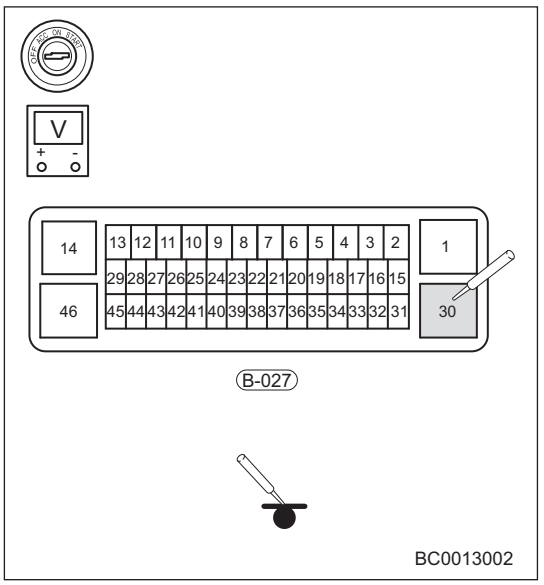

OK

Multimeter Connection	Condition	Specified Condition
B-027 (30) - Body ground (digital multimeter)	Always	Not less than 12 V
B-027 (30) - Body ground (test lamp 21 W)	Always	On

Result

Proceed to
OK
NG

NG → **Repair or replace body wire harness and connector**

OK

5 Check ABS/ESP control module ground circuit (ABS/ESP control module assembly - Body ground)

(a) Turn ENGINE START STOP switch to OFF.
(b) Disconnect the negative battery cable.
(c) Disconnect the ABS/ESP control module assembly connector B-027.
(d) Using a digital multimeter, check for continuity between terminals 14, 46 of ABS/ESP control module assembly and body ground to check if system ground circuit is normal.

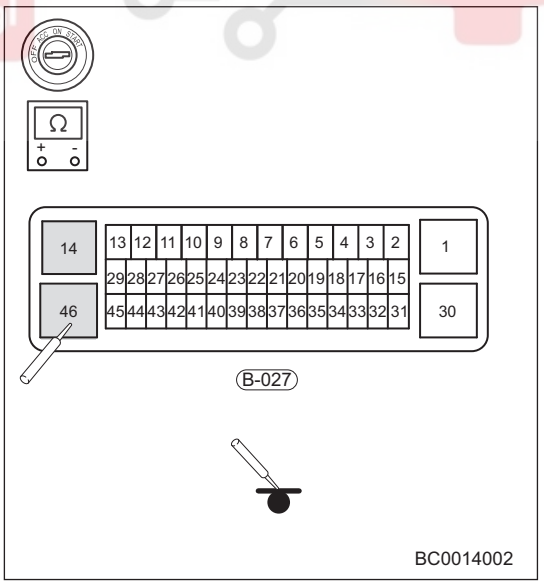

OK

Multimeter Connection	Condition	Specified Condition
B-027 (14) - Body ground	Always	≤ 1 Ω
B-027 (46) - Body ground	Always	≤ 1 Ω

Result

Proceed to
OK
NG

NG → **Repair or replace body wire harness and connector**

OK

WWW.DIGITALKHODRO.COM
021 62 99 92 92

WWW.DIGITALKHODRO.COM 021 62 99 92 92

6	Reconfirm DTCs

(a) Use diagnostic tester to clear DTCs.
(b) Start the engine.
(c) Drive vehicle at 40 km/h or above, read ABS/ESP control module assembly DTC again with diagnostic tester.
(d) Check if the same DTCs are still output.

Result

Proceed to
OK
NG

OK	**System operates normally**
NG	**Replace ABS/ESP control module assembly**

دیجیتال خودرو
شرکت دیجیتال خودرو سامانه (مسئولیت محدود)
اولین سامانه دیجیتال تعمیرکاران خودرو در ایران

WWW.DIGITALKHODRO.COM 021 62 99 92 92

WWW.DIGITALKHODRO.COM
021 62 99 92 92

DTC	C0020-04	ABS Pump Motor Control

Circuit Diagram

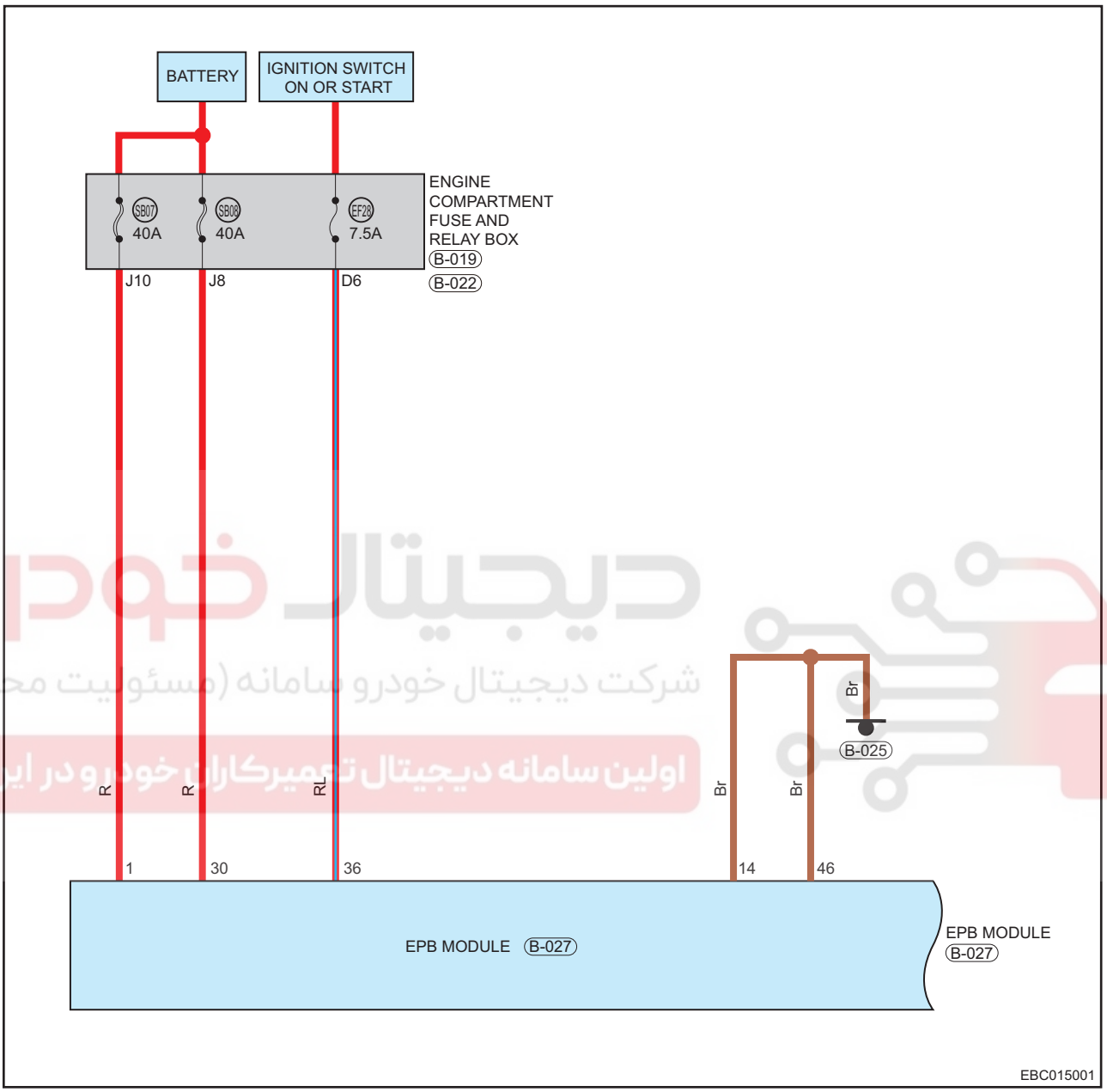

دیجیتال خودرو
شرکت دیجیتال خودرو سامانه (مسئولیت محدود)
اولین سامانه دیجیتال تعمیرکاران خودرو در ایران

WWW.DIGITALKHODRO.COM
021 62 99 92 92

WWW.DIGITALKHODRO.COM 021 62 99 92 92

Description

DTC	DTC Definition	DTC Detection Condition	Possible Cause
C0020-04	ABS Pump Motor Control	This DTC occurs when any of following conditions is met: • Pump motor operates with overload, and temperature is too high (overload protection). • Return pump motor relay missing voltage signal is more than 60 ms • Return pump motor relay missing voltage signal is more than 2.5 s • Return pump motor relay stops operating when return pump voltage does not decrease.	• Fuse malfunctions • Pump motor has poor ground connection • System overheat protection • Abnormal pump motor power supply • Pump motor malfunction

Caution:
When performing electrical equipment diagnosis and test, always refer to circuit diagram for related circuit and component information.

Procedure

1	Check for DTCs

(a) Leave vehicle for 5 minutes, clear and read ABS/ESP control module assembly DTC again with diagnostic tester.
(b) Refer to "DTC confirmation procedure".
(c) Check if the same DTCs are still output.

Result

Proceed to
OK
NG

NG → **Problem indicated by DTC is intermittent (system overheat protection)**

OK ↓

2	Check fuse

(a) Turn ENGINE START STOP switch to OFF.
(b) Disconnect the negative battery cable.
(c) Remove the fuse SB-07 (40 A) from engine compartment fuse and relay box.
(d) Check if fuse is blown.

Result

Proceed to
OK
NG

NG → **Replace fuse SB-07**

WWW.DIGITALKHODRO.COM 021 62 99 92 92

WWW.DIGITALKHODRO.COM
021 62 99 92 92

OK

3	Check wire harness and connector

Use circuit diagram as a guide to perform following procedures:

(a) Turn ENGINE START STOP switch to OFF.
(b) Disconnect the negative battery cable.
(c) Disconnect the ABS/ESP control module connector B-027.
(d) Check wire harness between terminal J10 of engine compartment fuse and relay box connector and terminal 1 of ABS/ESP control module assembly.
(e) Check if wire harnesses are worn, pierced, pinched or partially broken.
(f) Check for broken, bent, protruded or corroded terminals.
(g) Check if related connector terminals are in good condition.

Result

Proceed to
OK
NG

NG → **Repair or replace body wire harness and connector**

دیجیتال خودرو
شرکت دیجیتال خودرو سامانه (سهامی خاص) محدود
اولین سامانه جامع تعمیرات خودرو در ایران

OK

4	Check ABS/ESP control module power supply circuit (ABS/ESP control module assembly - power supply)

(a) Disconnect the negative battery cable.
(b) Turn ENGINE START STOP switch to OFF.
(c) Disconnect the ABS/ESP control module connector B-027.
(d) Using a digital multimeter, measure the voltage between terminal 1 of ABS/ESP control module assembly and body ground to check if power supply circuit is normal according to the table below.

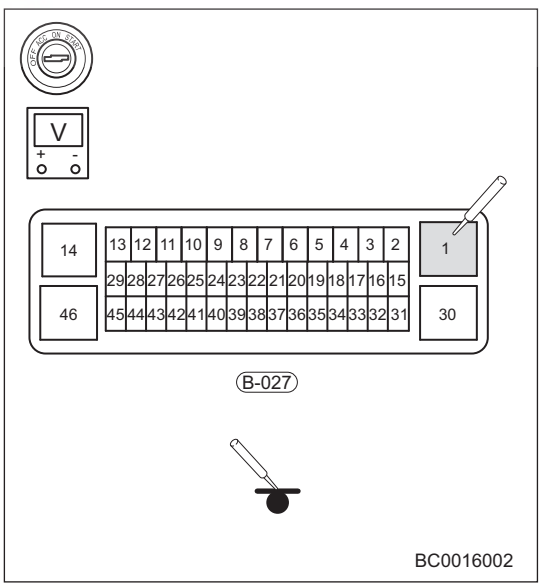

OK

Multimeter Connection	Condition	Specified Condition
B-027 (1) - Body ground (digital multimeter)	Always	Not less than 12 V
B-027 (1) - Body ground (test lamp 21 W)	Always	On

Result

Proceed to
OK
NG

NG → **Repair or replace body wire harness and connector**

WWW.DIGITALKHODRO.COM
021 62 99 92 92

WWW.DIGITALKHODRO.COM 021 62 99 92 92

OK

5	Check ABS/ESP control module ground circuit (ABS/ESP control module assembly - Body ground)

(a) Turn ENGINE START STOP switch to OFF.
(b) Disconnect the negative battery cable.
(c) Disconnect the ABS/ESP control module connector B-027.
(d) Using a digital multimeter, check for continuity between terminals 14, 46 of ABS/ESP control module assembly and body ground to check if system ground circuit is normal.

OK

Multimeter Connection	Condition	Specified Condition
B-123 (14) - Body ground	Always	≤ 1 Ω
B-123 (46) - Body ground	Always	≤ 1 Ω

Result

Proceed to
OK
NG

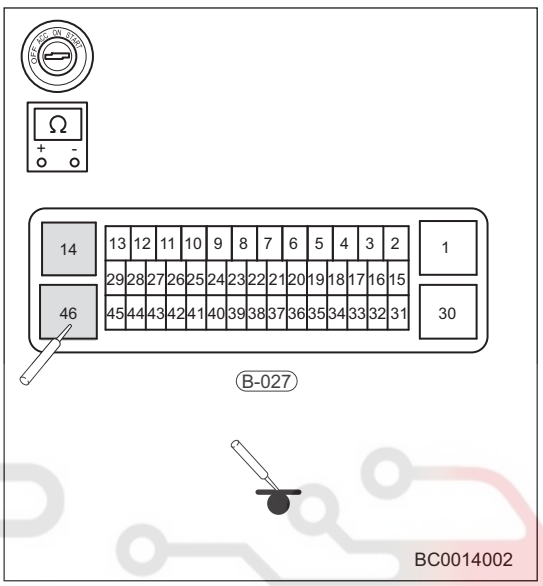

NG → **Repair or replace body wire harness and connector**

OK

6	Reconfirm DTCs

(a) Use diagnostic tester to clear DTCs.
(b) Start the engine.
(c) Drive vehicle at 40 km/h or above, read ABS/ESP control module assembly DTC again with diagnostic tester.
(d) Check if the same DTCs are still output.

Result

Proceed to
OK
NG

OK → **System operates normally**

NG → **Replace ABS/ESP control module assembly**

WWW.DIGITALKHODRO.COM 021 62 99 92 92

WWW.DIGITALKHODRO.COM
021 62 99 92 92

DTC	C0031-00	Left Front Wheel Speed Sensor Failures
DTC	C0031-09	Left Front Wheel Speed Sensor Failures
DTC	C0031-11	Left Front Wheel Speed Sensor Failures
DTC	C0031-12	Left Front Wheel Speed Sensor Failures
DTC	C0031-13	Left Front Wheel Speed Sensor Failures
DTC	C0031-29	Left Front Wheel Speed Sensor Failures
DTC	C0031-37	Left Front Wheel Speed Sensor Failures

Circuit Diagram

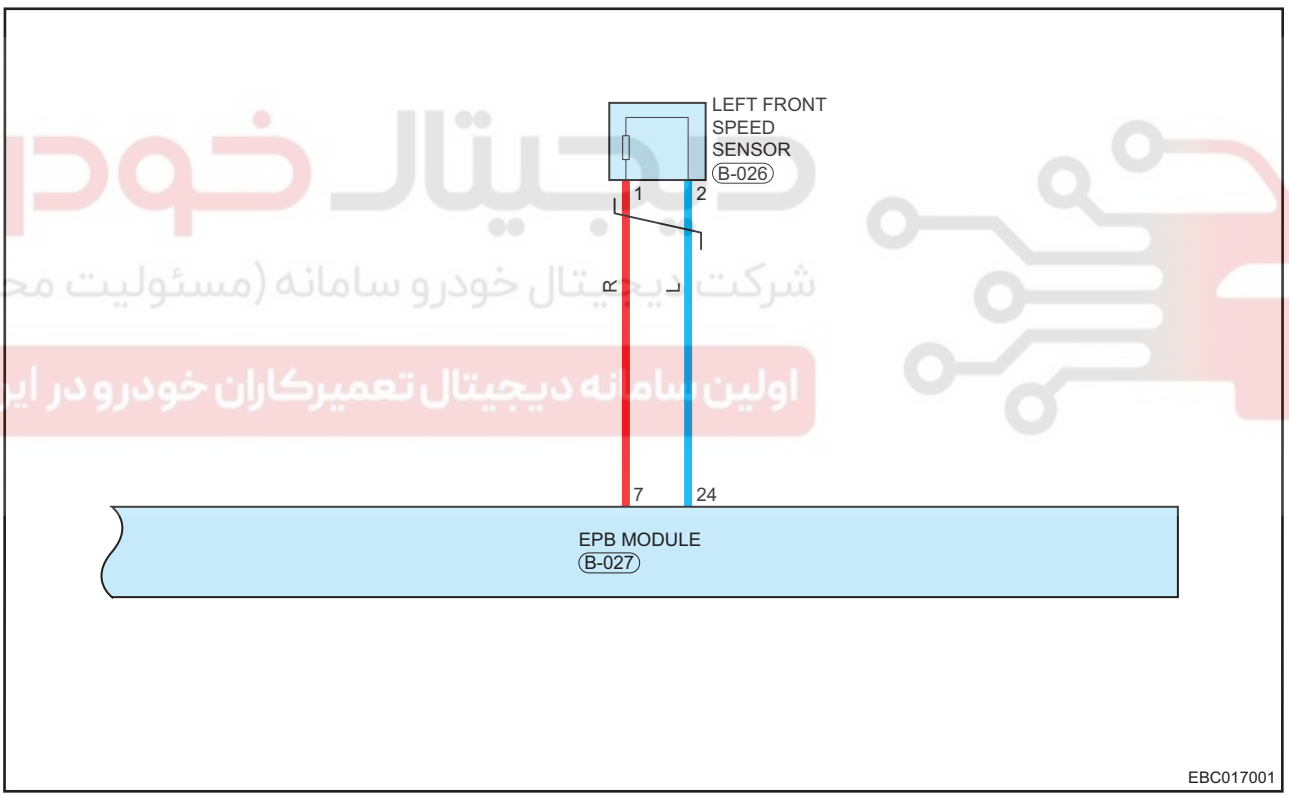

شرکت دیجیتال خودرو سامانه (مسئولیت محدود)
اولین سامانه دیجیتال تعمیرکاران خودرو در ایران

WWW.DIGITALKHODRO.COM
021 62 99 92 92

WWW.DIGITALKHODRO.COM 021 62 99 92 92

Description

DTC	DTC Definition	DTC Detection Condition	Possible Cause
C0031-00	Left Front Wheel Speed Sensor Failures	This DTC occurs when any of following conditions is met: • ABS/ESP control module assembly detects that wheel speed sensor signal wire is short to ground. • Wheel speed sensor line is open. • ABS/ESP control module assembly detects that wheel speed sensor signal wire is short to power supply. • ABS/ESP control module assembly detects that wheel speed sensor power supply wire is short to ground. • Wheel speed sensor signal is invalid.	• Wheel speed sensor signal wire is connecting with power supply wire in reverse • Signal wire is short to ground • Wheel speed sensor line is open, connector is loose or broken • Wheel speed sensor signal wire is short to power supply • Wheel speed sensor power supply wire is short to ground • Sensor connector damages • Wheel speed sensor is interfered by magnetic field outside (wheel or axle is not demagnetized) • Wheel speed sensor body is malfunctioning • Ring gear is not installed, teeth missing, dirty, demagnetized, off center • Clearance between sensor and ring gear is excessive • Number of ring gear teeth is wrong • Tire size is not as specified • ABS/ESP control module assembly is damaged
C0031-09	Left Front Wheel Speed Sensor Failures		
C0031-11	Left Front Wheel Speed Sensor Failures		
C0031-12	Left Front Wheel Speed Sensor Failures		
C0031-13	Left Front Wheel Speed Sensor Failures		
C0031-29	Left Front Wheel Speed Sensor Failures		
C0031-37	Left Front Wheel Speed Sensor Failures		

Caution:
When performing electrical equipment diagnosis and test, always refer to circuit diagram for related circuit and component information.

Procedure

1	Check front left wheel speed sensor wire harness and connector

(a) Turn ENGINE START STOP switch to OFF.
(b) Disconnect the negative battery cable.
(c) Disconnect the front left wheel speed sensor connector B-026.
(d) Check if wire harnesses are worn, pierced, pinched or partially broken.
(e) Check for broken, bent, protruded or corroded terminals.
(f) Check if related connector pins are in good condition.

Result

Proceed to
OK
NG

NG → **Repair or replace front left wheel speed sensor wire harness and connector**

OK

2	Check installation of front left wheel speed sensor

(a) Turn ENGINE START STOP switch to OFF.
(b) Disconnect the negative battery cable.
(c) Check front left wheel speed sensor mounting bolt for looseness.
(d) Check if excessive clearance exists between installation position of front left wheel speed sensor and front steering knuckle.
(e) Check installation position of front left wheel speed sensor for dirt.

WWW.DIGITALKHODRO.COM 021 62 99 92 92

WWW.DIGITALKHODRO.COM
021 62 99 92 92

Result

Proceed to
OK
NG

NG → **Tighten mounting bolt properly, clean or replace front left wheel speed sensor**

OK

3	Check front left wheel speed sensor

(a) Connect the diagnostic tester (the latest software) to Data Link Connector (DLC).
(b) Drive vehicle straight ahead, and read datastream of front left wheel speed sensor with diagnostic tester.
(c) Check if data change of front left wheel speed sensor matches that of other wheel speed sensors.

Result

Proceed to
OK
NG

NG → **Replace left front wheel speed sensor**

OK

شرکت دیجیتال خودرو سامانه (مسئولیت محدود)
اولین سامانه دیجیتال تعمیر اتومبیل ایران

4	Check front left drive shaft ring gear upper

(a) Check front left drive shaft ring gear upper.
(b) Check front left drive shaft ring gear upper for foreign matter, missing teeth or damage.
(c) Check front left drive shaft ring gear upper for secure installation.

Result

Proceed to
OK
NG

NG → **Replace outer joint assembly**

OK

5	Check wire harness and connector (Left front wheel speed sensor - ABS/ESP control module assembly)

(a) Turn ENGINE START STOP switch to OFF.
(b) Disconnect the negative battery cable.
(c) Disconnect the ABS/ESP control module assembly connector B-027.
(d) Disconnect the front left wheel speed sensor connector B-026.

WWW.DIGITALKHODRO.COM
021 62 99 92 92

WWW.DIGITALKHODRO.COM 021 62 99 92 92

(e) Using a digital multimeter, check for continuity between the terminals of connector B-027 and connector B-026 to check if there is an open in the wire harness and connector according to the table below.

OK

Multimeter Connection	Condition	Specified Condition
B-027 (24) - B-026 (2)	Always	≤ 1 Ω
B-027 (7) - B-026 (1)	Always	≤ 1 Ω
B-027 (24) - B-026 (1)	Always	∞
B-027 (7) - B-026 (2)	Always	∞

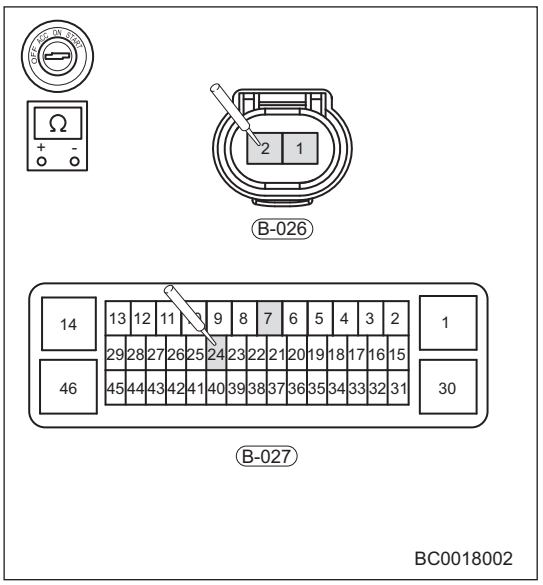

(f) Using a digital multimeter, check for continuity between connector B-027 and body ground to check if front left wheel speed sensor is short to ground.

OK

Multimeter Connection	Condition	Specified Condition
B-027 (7) - Body ground	Always	∞
B-027 (24) - Body ground	Always	∞

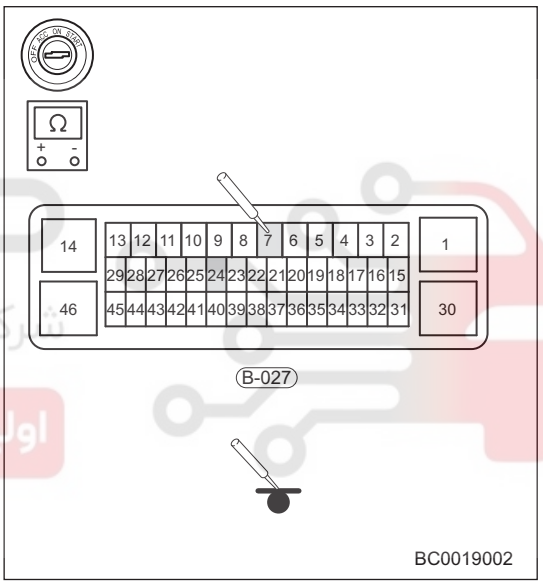

شرکت دیجیتال خودرو سامانه (مسئولیت محدود)
اولین سامانه دیجیتال تعمیرکاران خودرو در ایران

(g) Disconnect the negative battery cable.
(h) Turn ENGINE START STOP switch to ON.
(i) Using a digital multimeter, measure voltage between connector B-027 and body ground to check if front left wheel speed sensor is short to power supply according to the table below.

OK

Multimeter Connection	Condition	Specified Condition
B-027 (7) - Body ground	ENGINE START STOP switch ON	Approx. 0 V
B-027 (24) - Body ground	ENGINE START STOP switch ON	Approx. 0 V

Result

Proceed to
OK
NG

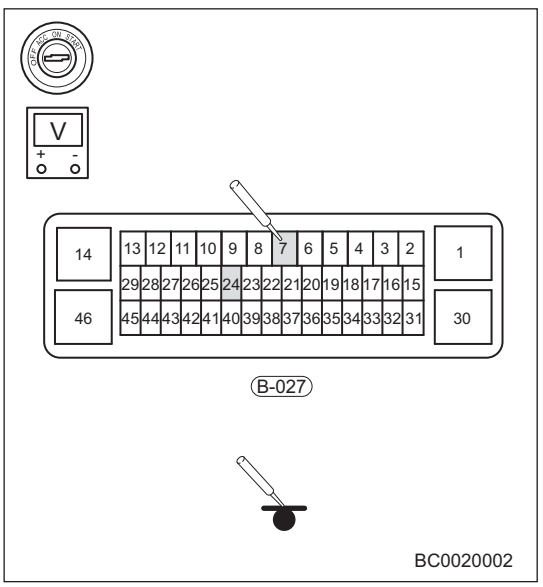

WWW.DIGITALKHODRO.COM 021 62 99 92 92

WWW.DIGITALKHODRO.COM
021 62 99 92 92

NG → **Repair or replace wire harness and connector between front left wheel speed sensor and ABS/ESP control module assembly**

OK

6	Reconfirm DTCs

(a) Use diagnostic tester to clear DTCs.
(b) Start the engine.
(c) Drive vehicle at 40 km/h or above, read ABS/ESP control module assembly DTC again with diagnostic tester.
(d) Check if the same DTCs are still output.

Result

Proceed to
OK
NG

OK → **System operates normally**

NG → **Replace ABS/ESP control module assembly**

شرکت دیجیتال خودرو سامانه (مسئولیت محدود)
اولین سامانه دیجیتال تعمیرکاران خودرو در ایران

WWW.DIGITALKHODRO.COM
021 62 99 92 92

WWW.DIGITALKHODRO.COM 021 62 99 92 92

DTC	C0034-00	Right Front Wheel Speed Sensor Failures
DTC	C0034-09	Right Front Wheel Speed Sensor Failures
DTC	C0034-11	Right Front Wheel Speed Sensor Failures
DTC	C0034-12	Right Front Wheel Speed Sensor Failures
DTC	C0034-13	Right Front Wheel Speed Sensor Failures
DTC	C0034-29	Right Front Wheel Speed Sensor Failures
DTC	C0034-37	Right Front Wheel Speed Sensor Failures

Circuit Diagram

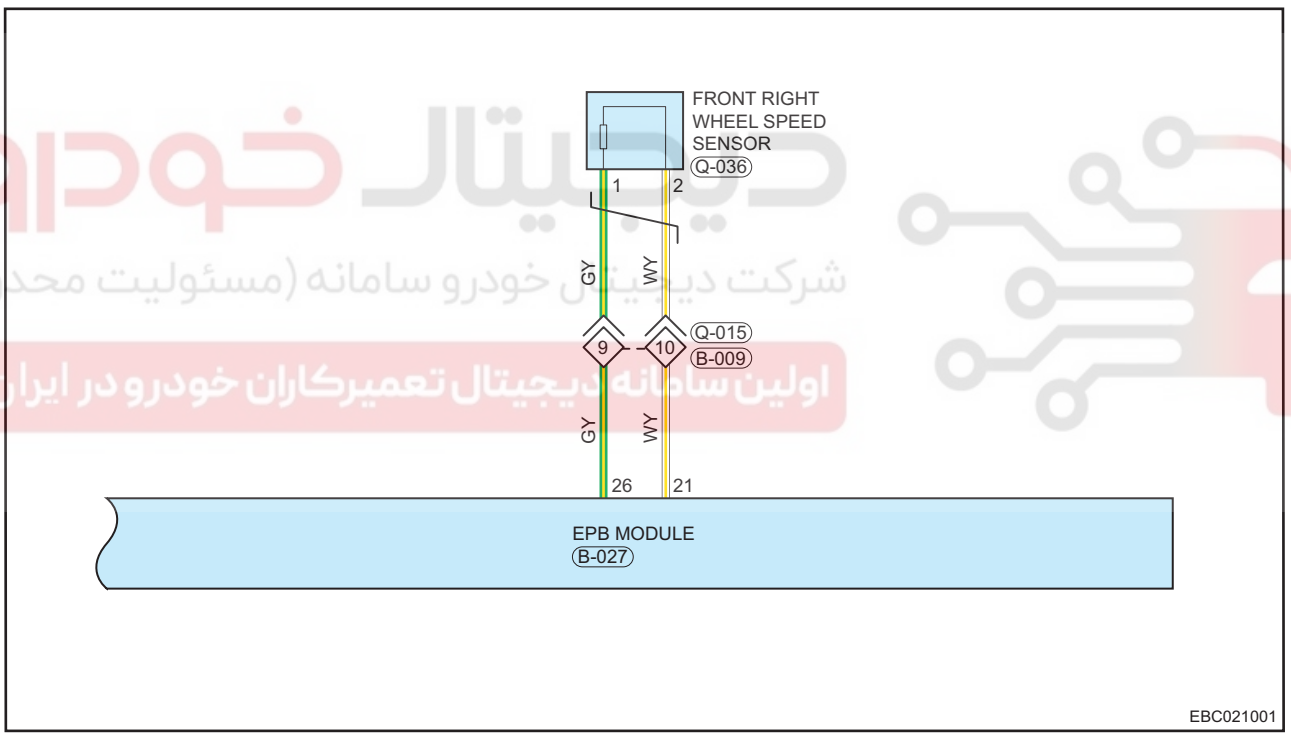

WWW.DIGITALKHODRO.COM 021 62 99 92 92

WWW.DIGITALKHODRO.COM
021 62 99 92 92

Description

DTC	DTC Definition	DTC Detection Condition	Possible Cause
C0034-00	Right Front Wheel Speed Sensor Failures	This DTC occurs when any of following conditions is met: • ABS/ESP control module assembly detects that wheel speed sensor signal wire is short to ground. • Wheel speed sensor line is open. • ABS/ESP control module assembly detects that wheel speed sensor signal wire is short to power supply. • ABS/ESP control module assembly detects that wheel speed sensor power supply wire is short to ground. • Wheel speed sensor signal is invalid.	• Wheel speed sensor signal wire is connecting with power supply wire in reverse • Signal wire is short to ground • Wheel speed sensor line is open, connector is loose or broken • Wheel speed sensor signal wire is short to power supply • Wheel speed sensor power supply wire is short to ground • Sensor connector damages • Wheel speed sensor is interfered by magnetic field outside (wheel or axle is not demagnetized) • Wheel speed sensor body is malfunctioning • Ring gear is not installed, teeth missing, dirty, demagnetized, off center • Clearance between sensor and ring gear is excessive • Number of ring gear teeth is wrong. • Tire size is not as specified • ABS/ESP control module assembly is damaged
C0034-09	Right Front Wheel Speed Sensor Failures		
C0034-11	Right Front Wheel Speed Sensor Failures		
C0034-12	Right Front Wheel Speed Sensor Failures		
C0034-13	Right Front Wheel Speed Sensor Failures		
C0034-29	Right Front Wheel Speed Sensor Failures		
C0034-37	Right Front Wheel Speed Sensor Failures		

Caution:
When performing electrical equipment diagnosis and test, always refer to circuit diagram for related circuit and component information.

Procedure

1	Check front right wheel speed sensor wire harness and connector

(a) Turn ENGINE START STOP switch to OFF.
(b) Disconnect the negative battery cable.
(c) Disconnect the front right wheel speed sensor connector Q-036.
(d) Check if wire harnesses are worn, pierced, pinched or partially broken.
(e) Check for broken, bent, protruded or corroded terminals.
(f) Check if related connector pins are in good condition.

Result

Proceed to
OK
NG

NG → **Repair or replace front right wheel speed sensor wire harness and connector**

OK

2	Check installation of front right wheel speed sensor

(a) Turn ENGINE START STOP switch to OFF.
(b) Disconnect the negative battery cable.
(c) Check front right wheel speed sensor mounting bolt for looseness.
(d) Check if excessive clearance exists between installation position of front right wheel speed sensor and front steering knuckle.
(e) Check installation position of right wheel speed sensor for dirt.

WWW.DIGITALKHODRO.COM
021 62 99 92 92

WWW.DIGITALKHODRO.COM 021 62 99 92 92

Result

Proceed to
OK
NG

NG → **Tighten mounting bolt properly, clean or replace front right wheel speed sensor**

OK

3	Check front right wheel speed sensor

(a) Connect the diagnostic tester (the latest software) to Data Link Connector (DLC).
(b) Drive vehicle straight ahead, and read datastream of front right wheel speed sensor with diagnostic tester.
(c) Check if data change of front right wheel speed sensor matches that of other wheel speed sensors.

Result

Proceed to
OK
NG

NG → **Replace right front wheel speed sensor**

OK

4	Check front right drive shaft ring gear upper

(a) Check front right drive shaft ring gear upper.
(b) Check front right drive shaft ring gear upper for foreign matter, missing teeth or damage.
(c) Check front right drive shaft upper ring gear for secure installation.

Result

Proceed to
OK
NG

NG → **Replace outer joint assembly**

OK

5	Check wire harness and connector (right front wheel speed sensor - ABS/ESP control module assembly)

(a) Turn ENGINE START STOP switch to OFF.
(b) Disconnect the negative battery cable.
(c) Disconnect the ABS/ESP control module assembly connector B-027.
(d) Disconnect the front right wheel speed sensor connector Q-036.

WWW.DIGITALKHODRO.COM 021 62 99 92 92

WWW.DIGITALKHODRO.COM
021 62 99 92 92

(e) Using a digital multimeter, check for continuity between terminals of connector B-027 and connector Q-036 to check if there is an open in the wire harness and connector according to the table below.

OK

Multimeter Connection	Condition	Specified Condition
B-027 (21) - Q-036 (2)	Always	≤ 1 Ω
B-027 (26) - Q-036 (1)	Always	≤ 1 Ω
B-027 (21) - Q-036 (1)	Always	∞
B-027 (26) - Q-036 (2)	Always	∞

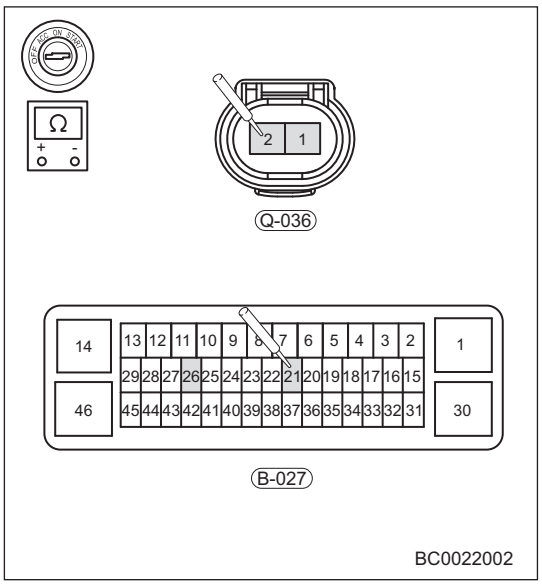

(f) Using a digital multimeter, check for continuity between connector B-027 and body ground to check if front right wheel speed sensor is short to ground according to the table below.

OK

Multimeter Connection	Condition	Specified Condition
B-027 (21) - Body ground	Always	∞
B-027 (26) - Body ground	Always	∞

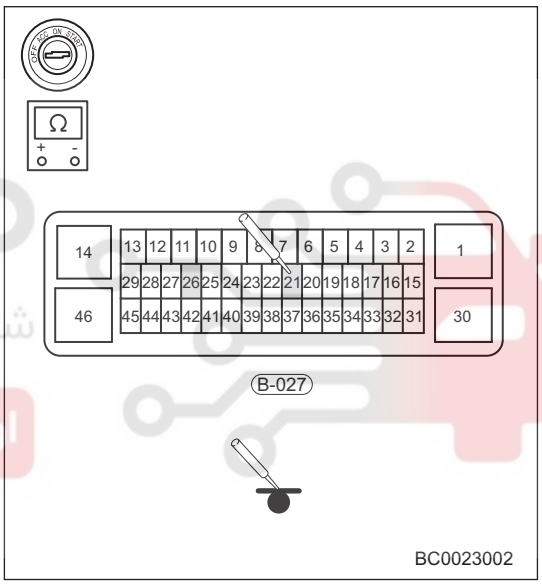

(g) Disconnect the negative battery cable.
(h) Turn ENGINE START STOP switch to ON.
(i) Using a digital multimeter, measure voltage between connector B-027 and body ground to check if front right wheel speed sensor is short to power supply according to the table below.

OK

Multimeter Connection	Condition	Specified Condition
B-027 (21) - Body ground	ENGINE START STOP switch ON	Approx. 0 V
B-027 (26) - Body ground	ENGINE START STOP switch ON	Approx. 0 V

Result

Proceed to
OK
NG

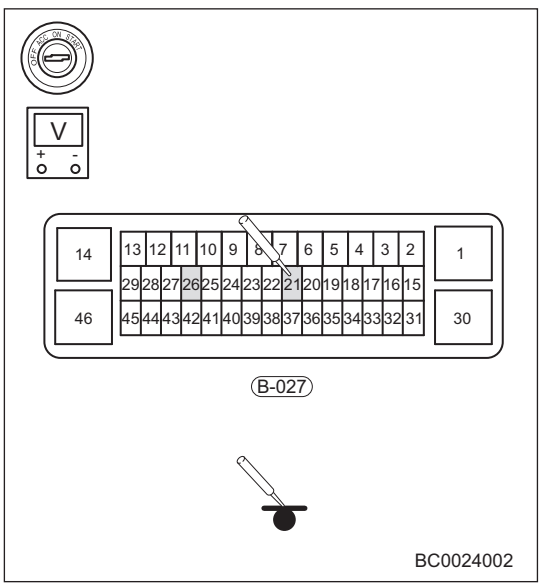

شرکت دیجیتال خودرو سامانه (مسئولیت محدود)
اولین سامانه دیجیتال تعمیرکاران خودرو در ایران

WWW.DIGITALKHODRO.COM
021 62 99 92 92

WWW.DIGITALKHODRO.COM 021 62 99 92 92

NG → **Repair or replace wire harness and connector between front right wheel speed sensor and ABS/ESP control module assembly**

OK

6	Reconfirm DTCs

(a) Use diagnostic tester to clear DTCs.
(b) Start the engine.
(c) Drive vehicle at 40 km/h or above, read ABS/ESP control module assembly DTC again with diagnostic tester.
(d) Check if the same DTCs are still output.

Result

Proceed to
OK
NG

OK → **System operates normally**

NG → **Replace ABS/ESP control module assembly**

شرکت دیجیتال خودرو سامانه (مسئولیت محدود)
اولین سامانه دیجیتال تعمیرکاران خودرو در ایران

WWW.DIGITALKHODRO.COM 021 62 99 92 92

WWW.DIGITALKHODRO.COM
021 62 99 92 92

DTC	C0037-00	Right Front Wheel Speed Sensor Failures
DTC	C0037-09	Left Rear Wheel Speed Sensor
DTC	C0037-11	Left Rear Wheel Speed Sensor
DTC	C0037-12	Left Rear Wheel Speed Sensor
DTC	C0037-13	Left Rear Wheel Speed Sensor
DTC	C0037-29	Left Rear Wheel Speed Sensor
DTC	C0037-37	Left Rear Wheel Speed Sensor

Circuit Diagram

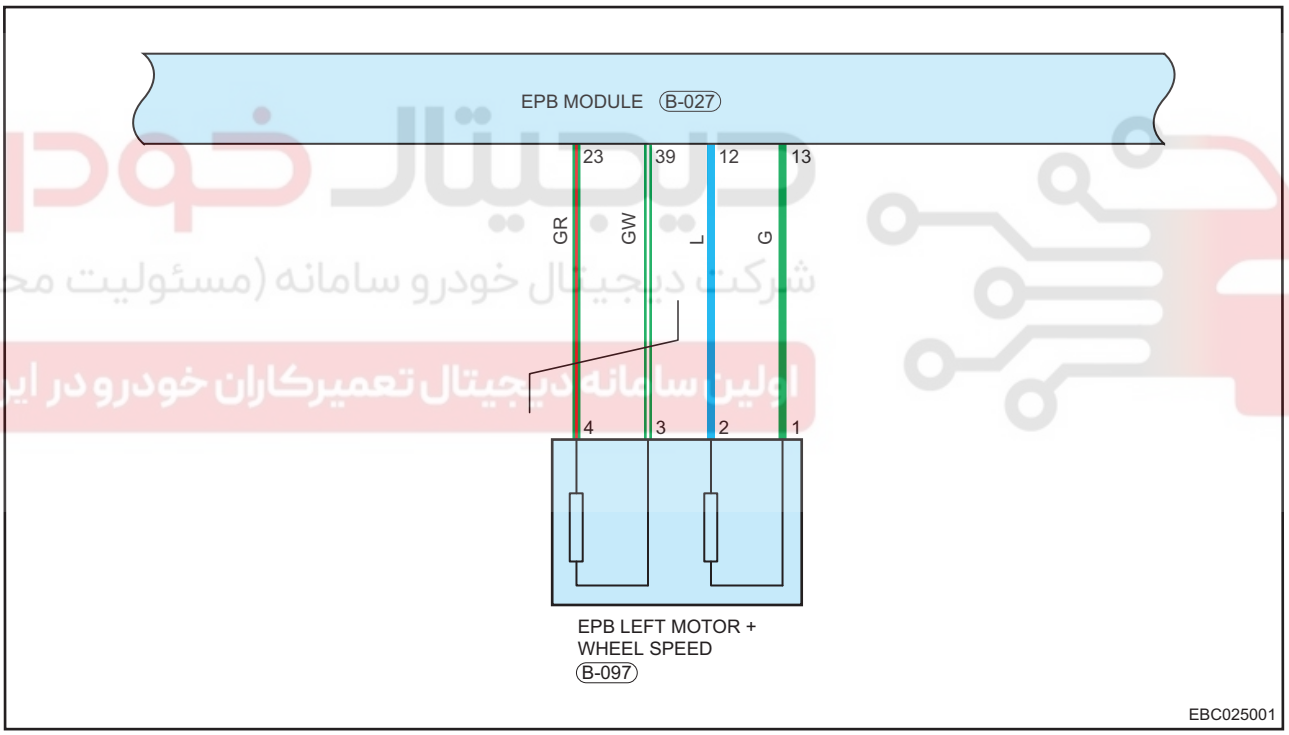

WWW.DIGITALKHODRO.COM
021 62 99 92 92

WWW.DIGITALKHODRO.COM 021 62 99 92 92

Description

DTC	DTC Definition	DTC Detection Condition	Possible Cause
C0037-00	Right Front Wheel Speed Sensor Failures	This DTC occurs when any of following conditions is met: • ABS/ESP control module assembly detects that wheel speed sensor signal wire is short to ground. • Wheel speed sensor line is open. • ABS/ESP control module assembly detects that wheel speed sensor signal wire is short to power supply. • ABS/ESP control module assembly detects that wheel speed sensor power supply wire is short to ground. • Wheel speed sensor signal is invalid.	• Wheel speed sensor signal wire is connecting with power supply wire in reverse • Signal wire is short to ground • Wheel speed sensor line is open, connector is loose or broken • Wheel speed sensor signal wire is short to power supply • Wheel speed sensor power supply wire is short to ground • Sensor connector damages • Wheel speed sensor is interfered by magnetic field outside (wheel or axle is not demagnetized) • Wheel speed sensor body is malfunctioning • Ring gear is not installed, teeth missing, dirty, demagnetized, off center • Clearance between sensor and ring gear is excessive • Number of ring gear teeth is wrong • Tire size is not as specified • ABS/ESP control module assembly is damaged
C0037-09	Left Rear Wheel Speed Sensor		
C0037-11	Left Rear Wheel Speed Sensor		
C0037-12	Left Rear Wheel Speed Sensor		
C0037-13	Left Rear Wheel Speed Sensor		
C0037-29	Left Rear Wheel Speed Sensor		
C0037-37	Left Rear Wheel Speed Sensor		

Caution:
When performing electrical equipment diagnosis and test, always refer to circuit diagram for related circuit and component information.

Procedure

1	Check rear left wheel speed sensor wire harness and connector

(a) Turn ENGINE START STOP switch to OFF.
(b) Disconnect the negative battery cable.
(c) Disconnect the rear left wheel speed sensor connector B-027.
(d) Check if wire harnesses are worn, pierced, pinched or partially broken.
(e) Check for broken, bent, protruded or corroded terminals.
(f) Check if related connector pins are in good condition.

Result

Proceed to
OK
NG

NG → **Repair or replace rear left wheel speed sensor wire harness and connector**

OK

2	Check installation of rear left wheel speed sensor

(a) Turn ENGINE START STOP switch to OFF.
(b) Disconnect the negative battery cable.
(c) Check rear left wheel speed sensor mounting bolt for looseness.
(d) Check if excessive clearance exists between installation position of rear left wheel speed sensor and front steering knuckle.
(e) Check installation position of rear left wheel speed sensor for dirt.

WWW.DIGITALKHODRO.COM 021 62 99 92 92

WWW.DIGITALKHODRO.COM
021 62 99 92 92

Result

Proceed to
OK
NG

NG → **Tighten mounting bolt properly, clean or replace rear left wheel speed sensor**

OK

3	Check rear left wheel speed sensor

(a) Connect the diagnostic tester (the latest software) to Data Link Connector (DLC).
(b) Drive vehicle straight ahead, and read datastream of rear left wheel speed sensor with diagnostic tester.
(c) Check if data change of rear left wheel speed sensor matches that of other wheel speed sensors.

Result

Proceed to
OK
NG

NG → **Replace left rear wheel speed sensor**

OK

4	Check rear left hub ring gear

(a) Check rear left hub ring gear.
(b) Check for foreign matter, missing teeth or damage on the rear left hub ring gear.
(c) Check if rear left hub assembly is securely installed.

Result

Proceed to
OK
NG

NG → **Replace rear left hub bearing assembly**

OK

5	Check wire harness and connector (Left rear wheel speed sensor - ABS/ESP control module assembly)

(a) Turn ENGINE START STOP switch to OFF.
(b) Disconnect the negative battery cable.
(c) Disconnect the ABS/ESP control module assembly connector B-027.
(d) Disconnect the rear left wheel speed sensor connector B-097.

WWW.DIGITALKHODRO.COM
021 62 99 92 92

WWW.DIGITALKHODRO.COM 021 62 99 92 92

(e) Using a digital multimeter, check for continuity between the terminals of connector B-027 and connector B-097 to check if there is an open in the wire harness and connector according to the table below.

OK

Multimeter Connection	Condition	Specified Condition
B-027 (39) - B-097 (3)	Always	≤ 1 Ω
B-027 (23) - B-097 (4)	Always	≤ 1 Ω
B-027 (39) - B-097 (4)	Always	∞
B-027 (23) - B-097 (3)	Always	∞

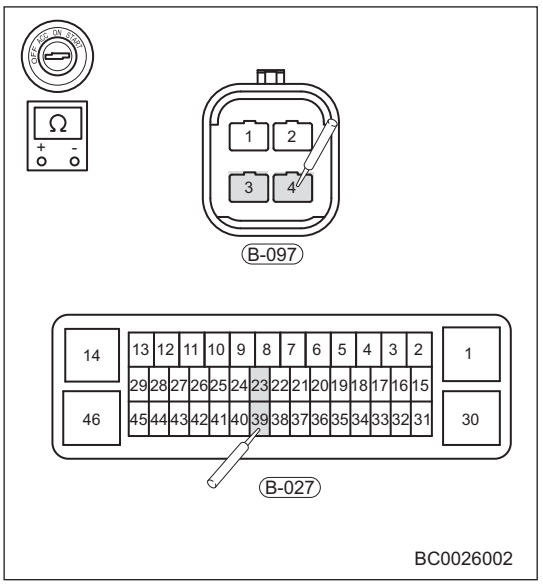

(f) Using a digital multimeter, check for continuity between connector B-027 and body ground to check if rear left wheel speed sensor is short to ground according to the table below.

OK

Multimeter Connection	Condition	Specified Condition
B-027 (23) - Body ground	Always	∞
B-027 (39) - Body ground	Always	∞

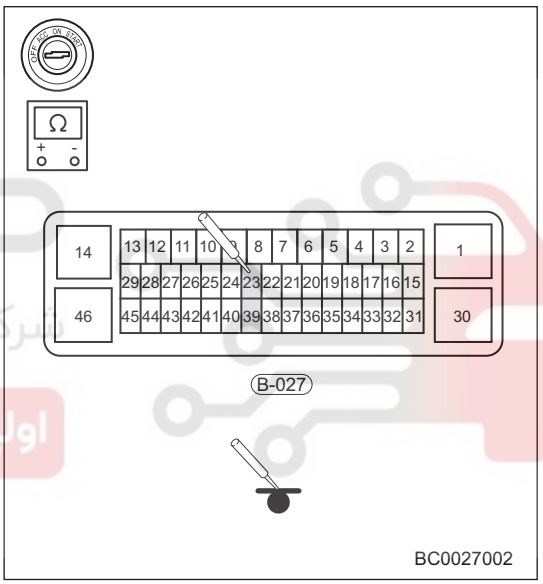

شرکت دیجیتال خودرو سامانه (مسئولیت محدود)
اولین سامانه دیجیتال تعمیرکاران خودرو در ایران

(g) Disconnect the negative battery cable.
(h) Turn ENGINE START STOP switch to ON.
(i) Using a digital multimeter, measure voltage between connector B-027 and body ground to check if rear left wheel speed sensor is short to power supply according to the table below.

OK

Multimeter Connection	Condition	Specified Condition
B-027 (23) - Body ground	ENGINE START STOP switch ON	Approx. 0 V
B-027 (39) - Body ground	ENGINE START STOP switch ON	Approx. 0 V

Result

Proceed to
OK
NG

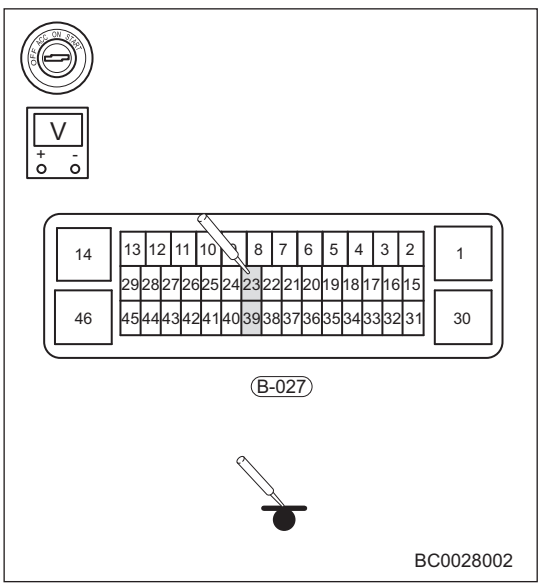

WWW.DIGITALKHODRO.COM 021 62 99 92 92

WWW.DIGITALKHODRO.COM 021 62 99 92 92

NG → **Repair or replace wire harness and connector between rear left wheel speed sensor and ABS/ESP control module assembly**

OK

6	Reconfirm DTCs

(a) Use diagnostic tester to clear DTCs.
(b) Start the engine.
(c) Drive vehicle at 40 km/h or above, read ABS/ESP control module assembly DTC again with diagnostic tester.
(d) Check if the same DTCs are still output.

Result

Proceed to
OK
NG

OK → **System operates normally**

NG → **Replace ABS/ESP control module assembly**

شرکت دیجیتال خودرو سامانه (مسئولیت محدود)
اولین سامانه دیجیتال تعمیرکاران خودرو در ایران

WWW.DIGITALKHODRO.COM 021 62 99 92 92

WWW.DIGITALKHODRO.COM 021 62 99 92 92

DTC	C003A-00	Right Rear Wheel Speed Sensor
DTC	C003A-09	Right Rear Wheel Speed Sensor
DTC	C003A-11	Right Rear Wheel Speed Sensor
DTC	C003A-12	Right Rear Wheel Speed Sensor
DTC	C003A-13	Right Rear Wheel Speed Sensor
DTC	C003A-29	Right Rear Wheel Speed Sensor
DTC	C003A-37	Right Rear Wheel Speed Sensor

Circuit Diagram

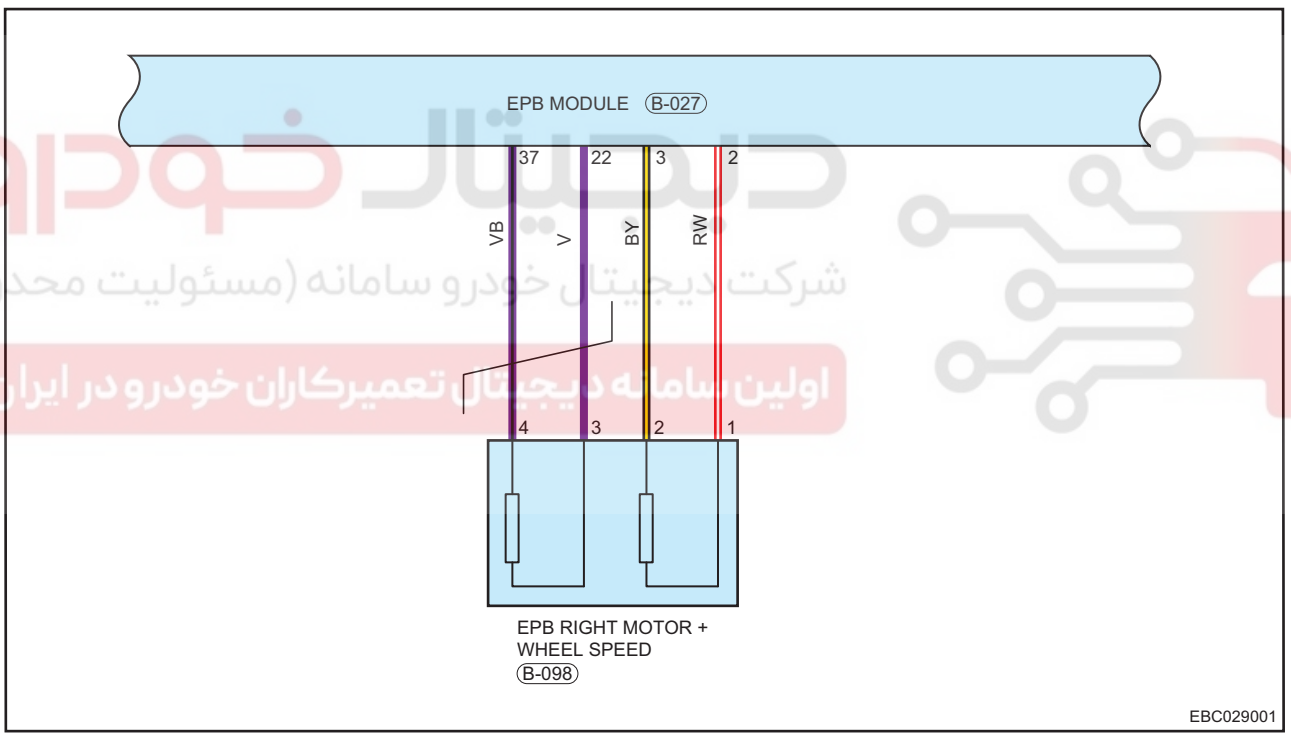

WWW.DIGITALKHODRO.COM 021 62 99 92 92

WWW.DIGITALKHODRO.COM 021 62 99 92 92

Description

DTC	DTC Definition	DTC Detection Condition	Possible Cause
C003A-00	Right Rear Wheel Speed Sensor	This DTC occurs when any of following conditions is met: • ABS/ESP control module assembly detects that wheel speed sensor signal wire is short to ground. • Wheel speed sensor line is open. • ABS/ESP control module assembly detects that wheel speed sensor signal wire is short to power supply. • ABS/ESP control module assembly detects that wheel speed sensor power supply wire is short to ground. • Wheel speed sensor signal is invalid.	• Wheel speed sensor signal wire is connecting with power supply wire in reverse • Signal wire is short to ground • Wheel speed sensor line is open, connector is loose or broken • Wheel speed sensor signal wire is short to power supply • Wheel speed sensor power supply wire is short to ground • Sensor connector damages • Wheel speed sensor is interfered by magnetic field outside (wheel or axle is not demagnetized) • Wheel speed sensor body is malfunctioning • Ring gear is not installed, teeth missing, dirty, demagnetized, off center • Clearance between sensor and ring gear is excessive • Number of ring gear teeth is wrong • Tire size is not as specified • ABS/ESP control module assembly is damaged
C003A-09	Right Rear Wheel Speed Sensor		
C003A-11	Right Rear Wheel Speed Sensor		
C003A-12	Right Rear Wheel Speed Sensor		
C003A-13	Right Rear Wheel Speed Sensor		
C003A-29	Right Rear Wheel Speed Sensor		
C003A-37	Right Rear Wheel Speed Sensor		

Caution:
When performing electrical equipment diagnosis and test, always refer to circuit diagram for related circuit and component information.

Procedure

1	Check rear right wheel speed sensor wire harness and connector

(a) Turn ENGINE START STOP switch to OFF.
(b) Disconnect the negative battery cable.
(c) Disconnect the rear right wheel speed sensor connector B-098.
(d) Check if wire harnesses are worn, pierced, pinched or partially broken.
(e) Check for broken, bent, protruded or corroded terminals.
(f) Check if related connector pins are in good condition.

Result

Proceed to
OK
NG

NG → **Repair or replace rear left wheel speed sensor wire harness and connector**

OK

2	Check installation of rear right wheel speed sensor

(a) Turn ENGINE START STOP switch to OFF.
(b) Disconnect the negative battery cable.
(c) Check rear right wheel speed sensor mounting bolt for looseness.
(d) Check if excessive clearance exists between installation position of rear right wheel speed sensor and front steering knuckle.
(e) Check installation position of rear right wheel speed sensor for dirt.

WWW.DIGITALKHODRO.COM 021 62 99 92 92

WWW.DIGITALKHODRO.COM 021 62 99 92 92

Result

Proceed to
OK
NG

NG → **Tighten mounting bolt properly, clean or replace rear right wheel speed sensor**

OK ↓

3	Check rear right wheel speed sensor

(a) Connect the diagnostic tester (the latest software) to Data Link Connector (DLC).
(b) Drive vehicle straight ahead, and read datastream of rear right wheel speed sensor with diagnostic tester.
(c) Check if data change of rear right wheel speed sensor matches that of other wheel speed sensors.

Result

Proceed to
OK
NG

NG → **Replace right rear wheel speed sensor**

OK ↓

شرکت دیجیتال خودرو سامانه (مسئولیت محدود)
اولین سامانه دیجیتال تعمیر کلان خودرو ایران

4	Check right rear hub ring gear

(a) Check right rear hub ring gear.
(b) Check for foreign matter, missing teeth or damage on the rear right hub ring gear.
(c) Check if rear right hub assembly is securely installed.

Result

Proceed to
OK
NG

NG → **Replace rear right hub bearing assembly**

OK ↓

5	Check wire harness and connector (Right rear wheel speed sensor - ABS/ESP control module assembly)

(a) Turn ENGINE START STOP switch to OFF.
(b) Disconnect the negative battery cable.
(c) Disconnect the ABS/ESP control module assembly connector B-027.
(d) Disconnect the rear right wheel speed sensor connector B-098.

WWW.DIGITALKHODRO.COM 021 62 99 92 92

WWW.DIGITALKHODRO.COM
021 62 99 92 92

(e) Using a digital multimeter, check for continuity between terminals of connector B-027 and connector B-098 to check if there is an open in the wire harness and connector according to the table below.

OK

Multimeter Connection	Condition	Specified Condition
B-027 (22) - B-098 (3)	Always	≤ 1 Ω
B-027 (37) - B-098 (4)	Always	≤ 1 Ω
B-027 (22) - B-098 (4)	Always	∞
B-027 (37) - B-098 (3)	Always	∞

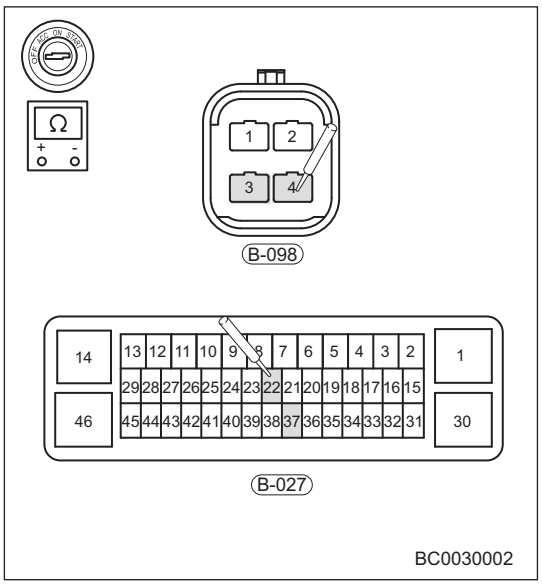

(f) Using a digital multimeter, check for continuity between connector B-027 and body ground to check if rear right wheel speed sensor is short to ground according to the table below.

OK

Multimeter Connection	Condition	Specified Condition
B-027 (22) - Body ground	Always	∞
B-027 (37) - Body ground	Always	∞

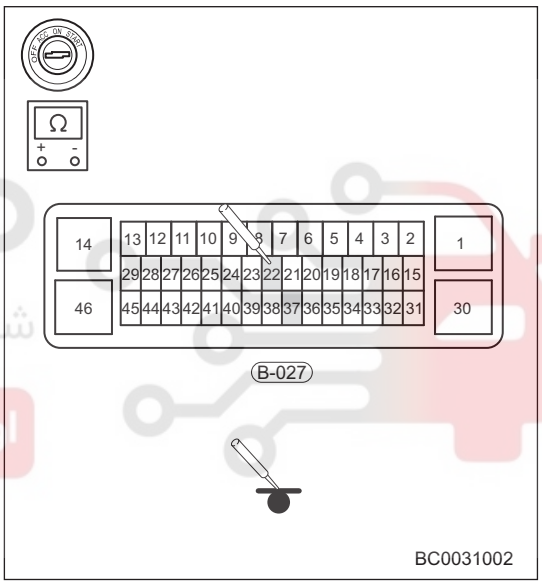

شرکت دیجیتال خودرو سامانه (مسئولیت محدود)
اولین سامانه دیجیتال تعمیرکاران خودرو در ایران

(g) Disconnect the negative battery cable.
(h) Turn ENGINE START STOP switch to ON.
(i) Using a digital multimeter, measure voltage between connector B-027 and body ground to check if rear right wheel speed sensor is short to power supply according to the table below.

OK

Multimeter Connection	Condition	Specified Condition
B-027 (22) - Body ground	ENGINE START STOP switch ON	Approx. 0 V
B-027 (37) - Body ground	ENGINE START STOP switch ON	Approx. 0 V

Result

Proceed to
OK
NG

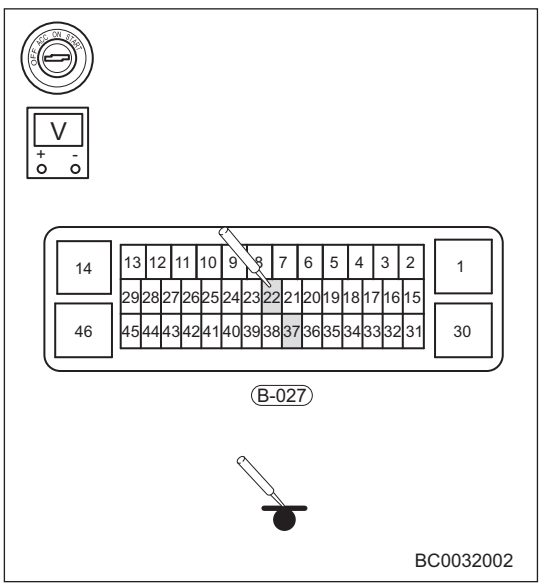

WWW.DIGITALKHODRO.COM
021 62 99 92 92

WWW.DIGITALKHODRO.COM 021 62 99 92 92

NG → **Repair or replace wire harness and connector between rear right wheel speed sensor and ABS/ESP control module assembly**

OK

6	Reconfirm DTCs

(a) Use diagnostic tester to clear DTCs.
(b) Start the engine.
(c) Drive vehicle at 40 km/h or above, read ABS/ESP control module assembly DTC again with diagnostic tester.
(d) Check if the same DTCs are still output.

Result

Proceed to
OK
NG

OK → **System operates normally**

NG → **Replace ABS/ESP control module assembly**

شرکت دیجیتال خودرو سامانه (مسئولیت محدود)
اولین سامانه دیجیتال تعمیرکاران خودرو در ایران

WWW.DIGITALKHODRO.COM 021 62 99 92 92

WWW.DIGITALKHODRO.COM 021 62 99 92 92

DTC	C0051-29	Steering Wheel Position Sensor (ESP Only)
DTC	C0051-54	Steering Wheel Position Sensor (ESP Only)
DTC	C0051-64	Steering Wheel Position Sensor (ESP Only)
DTC	U0126-87	Lost Communication With SAM
DTC	U0428-81	Invalid Data Received From SAM

Circuit Diagram

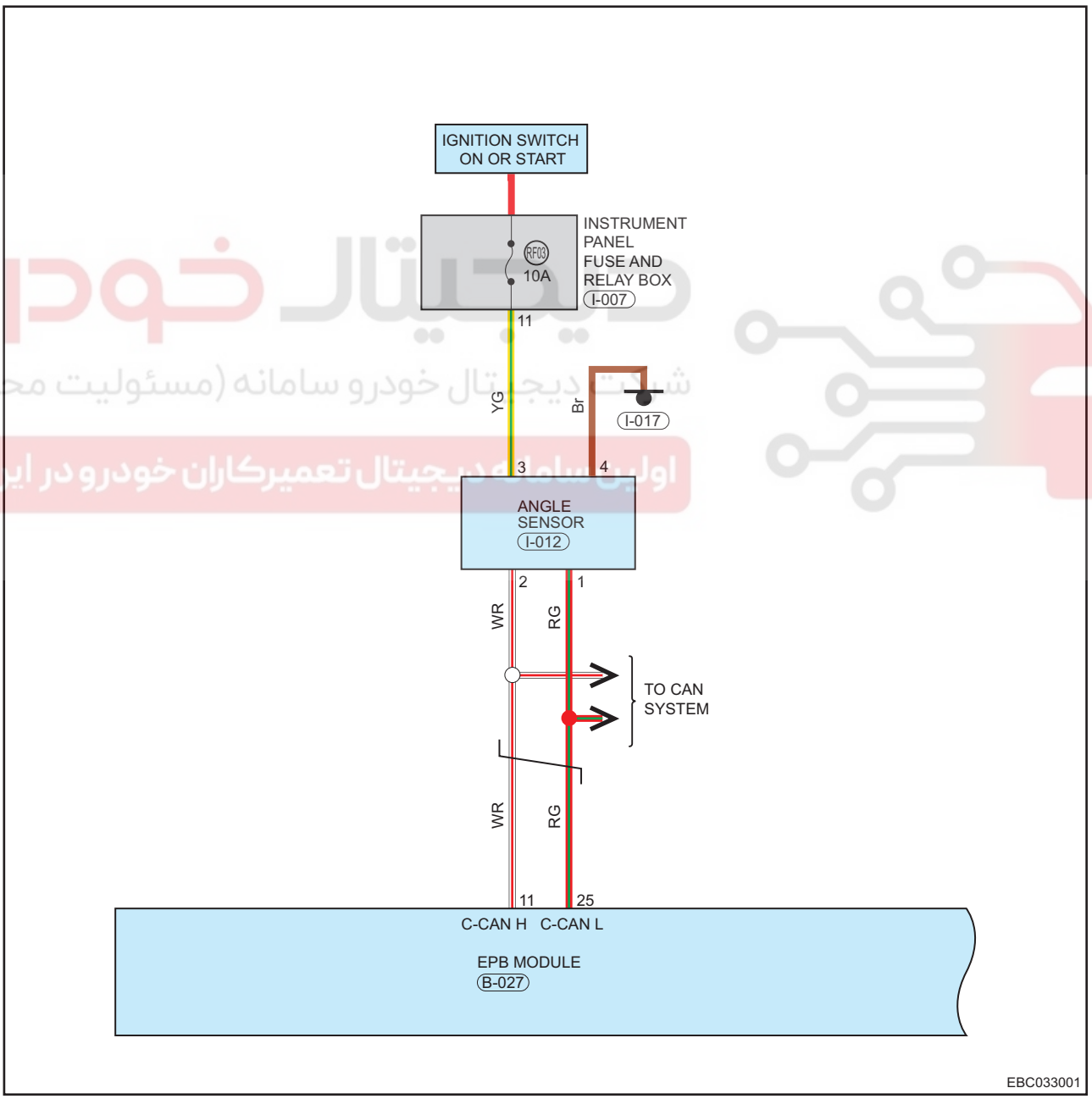

شبکه دیجیتال خودرو سامانه (مسئولیت محدود)
اولین سامانه دیجیتال تعمیرکاران خودرو در ایران

WWW.DIGITALKHODRO.COM 021 62 99 92 92

WWW.DIGITALKHODRO.COM 021 62 99 92 92

Description

DTC	DTC Definition	DTC Detection Condition	Possible Cause
C0051-29	Steering Wheel Position Sensor (ESP Only)	This DTC occurs when any of following conditions is met: • Steering wheel angle sensor is unmatched (central point is not found). • Steering wheel angle sensor signal is abnormal. • Steering wheel angle sensor signal is interrupted.	• Steering angle sensor is unmatched • Steering angle sensor line is short or open. • Steering angle sensor is damaged
C0051-54	Steering Wheel Position Sensor (ESP Only)		
C0051-64	Steering Wheel Position Sensor (ESP Only)		
U0126-87	Lost Communication With SAM		
U0428-81	Invalid Data Received From SAM		

Caution:
When performing electrical equipment diagnosis and test, always refer to circuit diagram for related circuit and component information.

Procedure

1	Check steering angle sensor calibration

(a) Turn ENGINE START STOP switch to ON.
(b) Connect the diagnostic tester (the latest software) to Data Link Connector (DLC).
(c) Calibrate the steering angle sensor according to instruction of diagnostic tester.
(d) Use diagnostic tester to clear DTCs.
(e) Start the engine.
(f) Drive vehicle at 40 km/h or above, read ABS/ESP control module assembly DTC again with diagnostic tester.
(g) Check if the same DTCs are still output.

Result

Proceed to
OK
NG

NG → **Steering angle sensor is not calibrated**

OK

2	Check fuse

(a) Turn ENGINE START STOP switch to OFF.
(b) Disconnect the negative battery cable.
(c) Remove fuse RF03 (10 A) from instrument panel fuse and relay box.
(d) Check if fuse is blown.

Result

Proceed to
OK
NG

NG → **Replace fuse RF03**

WWW.DIGITALKHODRO.COM 021 62 99 92 92

WWW.DIGITALKHODRO.COM
021 62 99 92 92

OK

3	Check wire harness and connector

(a) Turn ENGINE START STOP switch to OFF.
(b) Disconnect the negative battery cable.
(c) Disconnect the steering angle sensor connector I-012.
(d) Check if wire harnesses are worn, pierced, pinched or partially broken.
(e) Check for broken, bent, protruded or corroded terminals.
(f) Check if related connector pins are in good condition.

Result

Proceed to
OK
NG

NG → **Repair or replace body/instrument panel wire harness and connector**

OK

4	Check steering angle sensor power supply and ground

(a) Disconnect the negative battery cable.
(b) Turn ENGINE START STOP switch to ON.
(c) Using a digital multimeter, measure the voltage between steering angle sensor connector terminal I-012 (3) and body ground to check if system power supply circuit is normal according to the table below.

OK

Multimeter Connection	Condition	Specified Condition
I-012 (3) - Body ground (digital multimeter)	ENGINE START STOP switch ON	Not less than 12 V
I-012 (3) - Body ground (test lamp 21 W)	ENGINE START STOP switch ON	On

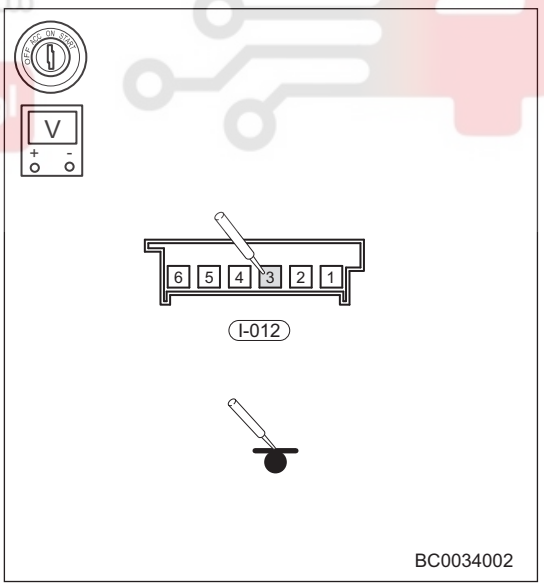

(d) Turn ENGINE START STOP switch to OFF.
(e) Disconnect the negative battery cable.

WWW.DIGITALKHODRO.COM
021 62 99 92 92

WWW.DIGITALKHODRO.COM 021 62 99 92 92

(f) Using a digital multimeter, check for continuity between steering angle sensor connector terminal I-012 and body ground to check if system ground circuit is normal according to the table below.

OK

Multimeter Connection	Condition	Specified Condition
I-012 (4) - Body ground	Turn ENGINE START STOP switch to OFF	∞

Result

Proceed to
OK
NG

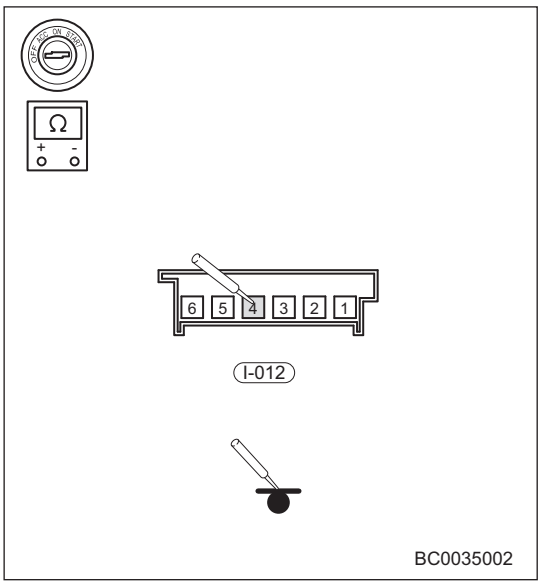

NG → **Repair or replace body/instrument panel wire harness and connector**

OK

5 Check CAN communication control circuit (steering angle sensor)

(a) Turn ENGINE START STOP switch to OFF, disconnect the negative battery cable.
(b) Disconnect the steering angle sensor connector I-012.
(c) Use a digital multimeter to check if connection between steering angle sensor connector and CAN communication line is normal according to the table below.

OK

Multimeter Connection	Condition	Specified Condition (Ω)
I-012 (1) - I-012 (2)	Always	≈ 60

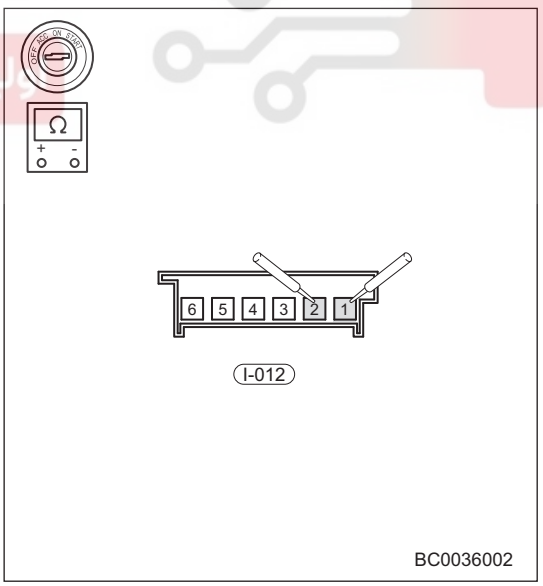

WWW.DIGITALKHODRO.COM 021 62 99 92 92

WWW.DIGITALKHODRO.COM
021 62 99 92 92

(d) Use a digital multimeter to check if line between steering angle sensor and CAN communication line is short to ground according to the table below.

OK

Multimeter Connection	Condition	Specified Condition
I-012 (1) - Body ground	Always	More than 1 MΩ
I-012 (2) - Body ground	Always	More than 1 MΩ

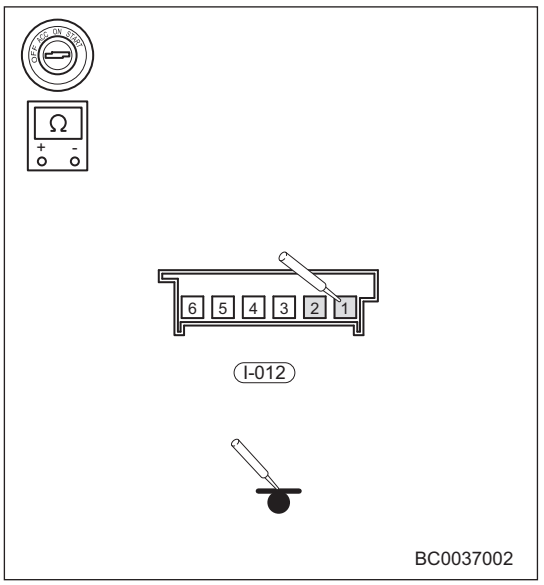

(e) Disconnect the negative battery cable.
(f) Turn ENGINE START STOP switch to ON.
(g) Use a digital multimeter to check if line between steering angle sensor and CAN communication line is short to power supply according to the table below.

OK

Multimeter Connection	Condition	Specified Condition
I-012 (1) - Body ground	Always	1.5 - 2.5 V
I-012 (2) - Body ground	Always	2.5 - 3.5 V

Result

Proceed to
OK
NG

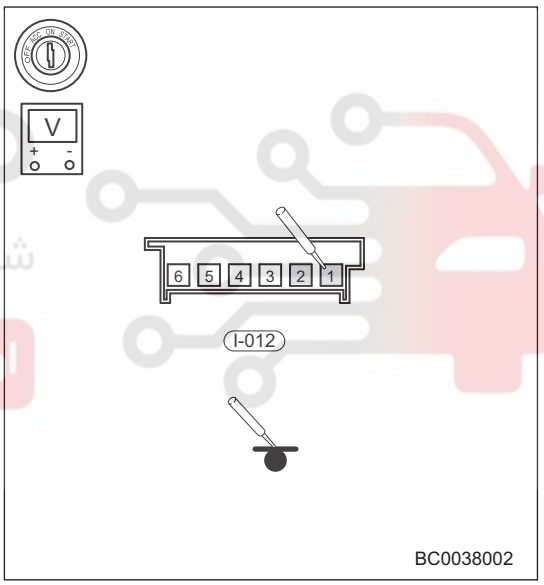

شرکت دیجیتال خودرو سامانه (مسئولیت محدود)
اولین سامانه دیجیتال همیاران خودرو در ایران

NG → **Refer to check and repair CAN communication**

OK

6	Reconfirm DTCs

(a) Use diagnostic tester to clear DTCs.
(b) Start the engine.
(c) Drive vehicle at 40 km/h or above, read ABS/ESP control module assembly DTC again with diagnostic tester.
(d) Check if the same DTCs are still output.

WWW.DIGITALKHODRO.COM
021 62 99 92 92

WWW.DIGITALKHODRO.COM 021 62 99 92 92

OK

Proceed to
OK
NG

OK → **System operates normally**

NG → **Replace ABS/ESP control module assembly**

دیجیتال خودرو
شرکت دیجیتال خودرو سامانه (مسئولیت محدود)
اولین سامانه دیجیتال تعمیرکاران خودرو در ایران

WWW.DIGITALKHODRO.COM 021 62 99 92 92

WWW.DIGITALKHODRO.COM 021 62 99 92 92

DTC	C0061-64	Lateral Acceleration Sensor (ESP Only)

DTC	C0062-64	Longitudinal Acceleration Sensor (ESP Only)

DTC	C0063-64	Yaw Rate Sensor (ESP Only)

DTC	C0063-01	Yaw Rate Sensor (ESP Only)

DTC	C0063-54	Yaw Rate Sensor (ESP Only)

Description

DTC	DTC Definition	DTC Detection Condition	Possible Cause
C0061-64	Lateral Acceleration Sensor (ESP Only)	This DTC occurs when any of following conditions is met: • Y&G sensor is not calibrated. • Y&G sensors signal is abnormal. • Y&G sensors signal is interrupted.	• Y&G sensor is not calibrated • Y&G sensor is short or open • Y&G sensor is damaged
C0062-64	Longitudinal Acceleration Sensor (ESP Only)		
C0063-64	Yaw Rate Sensor (ESP Only)		
C0063-01	Yaw Rate Sensor (ESP Only)		
C0063-54	Yaw Rate Sensor (ESP Only)		

Caution:
When performing electrical equipment diagnosis and test, always refer to circuit diagram for related circuit and component information.

شرکت دیجیتال خودرو سامانه (مسئولیت محدود)
اولین سامانه دیجیتال مدیریت خودرو در ایران

Procedure

1	Check sensor calibration

(a) Turn ENGINE START STOP switch to ON.
(b) Connect the diagnostic tester (the latest software) to Data Link Connector (DLC).
(c) Calibrate the Y&G sensor according to instruction of diagnostic tester.
(d) Use diagnostic tester to clear DTCs.
(e) Start the engine.
(f) Drive vehicle at 40 km/h or above, read ABS/ESP control module assembly DTC again with diagnostic tester.
(g) Check if the same DTCs are still output.
End

Proceed to
OK
NG

NG → **Y&G sensor is not calibrated**

OK ↓

2	Check installation of ABS/ESP control module

Caution:
Y&G sensor is integrated and installed inside of ABS/ESP control module.

WWW.DIGITALKHODRO.COM 021 62 99 92 92

WWW.DIGITALKHODRO.COM 021 62 99 92 92

(a) Check ABS/ESP control module fixing bolt for looseness.
(b) Check ABS/ESP control module fixing bracket for looseness.

Result

Proceed to
OK
NG

NG → **Retighten ABS/ESP control module fixing bolt and bracket**

OK

3	Reconfirm DTCs

(a) Use diagnostic tester to clear DTCs.
(b) Start the engine.
(c) Drive vehicle at 40 km/h or above, read ABS/ESP control module assembly DTC again with diagnostic tester.
(d) Check if the same DTCs are still output.

Result

Proceed to
OK
NG

OK → **System operates normally**

NG → **Replace ABS/ESP control module**

دیجیتال خودرو
شرکت دیجیتال خودرو سامانه مدیریت محتوا
اولین سامانه دیجیتال تعمیرکاران خودرو در ایران

WWW.DIGITALKHODRO.COM 021 62 99 92 92

WWW.DIGITALKHODRO.COM 021 62 99 92 92

DTC	C006B-00	Stability System Active Too Long

Description

DTC	DTC Definition	DTC Detection Condition	Possible Cause
C006B-00	Stability System Active Too Long	This DTC occurs when any of following conditions is met: • ABS receive command to continue operation (more than 1 second). • ESP receive command to continue operation (more than 10 second).	• Wheel speed differs • Sensor signal is incorrect • ABS/ESP control module assembly is damaged

Caution:
When performing electrical equipment diagnosis and test, always refer to circuit diagram for related circuit and component information.

Procedure

1	Check wire harness and connector

(a) Turn ENGINE START STOP switch to OFF.
(b) Disconnect the negative battery cable.
(c) Disconnect all wheel speed sensor and steering angle sensor connectors.
(d) Check if wire harnesses are worn, pierced, pinched or partially broken.
(e) Check for broken, bent, protruded or corroded terminals.
(f) Check if terminal contact pins of related connectors are in good condition.

Result

Proceed to
OK
NG

شرکت دیجیتال خودرو سامانه (مسئولیت محدود)
اولین سامانه دیجیتال تعمیرکاران خودرو در ایران

NG → **Repair or replace related wire harness and connector**

OK

2	Check installation of wheel speed sensor

(a) Turn ENGINE START STOP switch to OFF.
(b) Disconnect the negative battery cable.
(c) Check wheel speed sensor sensor mounting bolt for looseness.
(d) Check wheel speed sensor mounting position and hub ring gear for any gaps.
(e) Check installation position of wheel speed sensor for dust.

Result

Proceed to
OK
NG

NG → **Tighten mounting bolts correctly, clean or replace wheel speed sensor**

WWW.DIGITALKHODRO.COM 021 62 99 92 92

WWW.DIGITALKHODRO.COM 021 62 99 92 92

OK

3	Check wheel speed sensor

(a) Connect the diagnostic tester (the latest software) to Data Link Connector (DLC).
(b) Drive vehicle straight ahead, and read datastream of wheel speed sensor with diagnostic tester.
(c) Check if data change of wheel speed sensor matches that of other wheel speed sensors.

Result

Proceed to
OK
NG

NG → **Replace corresponding wheel speed sensor**

OK

4	Check hub gear ring and drive shaft ring gear upper

(a) Remove the hub assembly.
(b) Check hub gear ring and drive shaft ring gear upper for foreign matter, missing teeth or damage.
(c) Check hub assembly and drive shaft ring gear upper for secure installation.

Result

Proceed to
OK
NG

شرکت دیجیتال خودرو سامانه (مسئولیت محدود)
اولین سامانه دیجیتال تعمیرکاران خودرو در ایران

NG → **Replace corresponding signal ring gear**

OK

5	Check installation of steering angle sensor

(a) Turn ENGINE START STOP switch to OFF.
(b) Disconnect the negative battery cable.
(c) Check if steering angle sensor connector is connected securely.
(d) Check if steering angle sensor is installed in place.
(e) Check installation position of steering angle sensor for dust.

Result

Proceed to
OK
NG

NG → **Clean and replace steering angle sensor**

OK

WWW.DIGITALKHODRO.COM 021 62 99 92 92

WWW.DIGITALKHODRO.COM
021 62 99 92 92

6	Reconfirm DTCs

(a) Use diagnostic tester to clear DTCs.
(b) Start the engine.
(c) Drive vehicle at 40 km/h or above, read ABS/ESP control module assembly DTC again with diagnostic tester.
(d) Check if the same DTCs are still output.

Result

Proceed to
OK
NG

OK	**System operates normally**
NG	**Replace ABS/ESP control module assembly**

دیجیتال خودرو
شرکت دیجیتال خودرو سامانه (مسئولیت محدود)
اولین سامانه دیجیتال تعمیرکاران خودرو در ایران

WWW.DIGITALKHODRO.COM
021 62 99 92 92

WWW.DIGITALKHODRO.COM 021 62 99 92 92

DTC	C0089-04	TCS Disable Switch (ESP Only)

Circuit Diagram

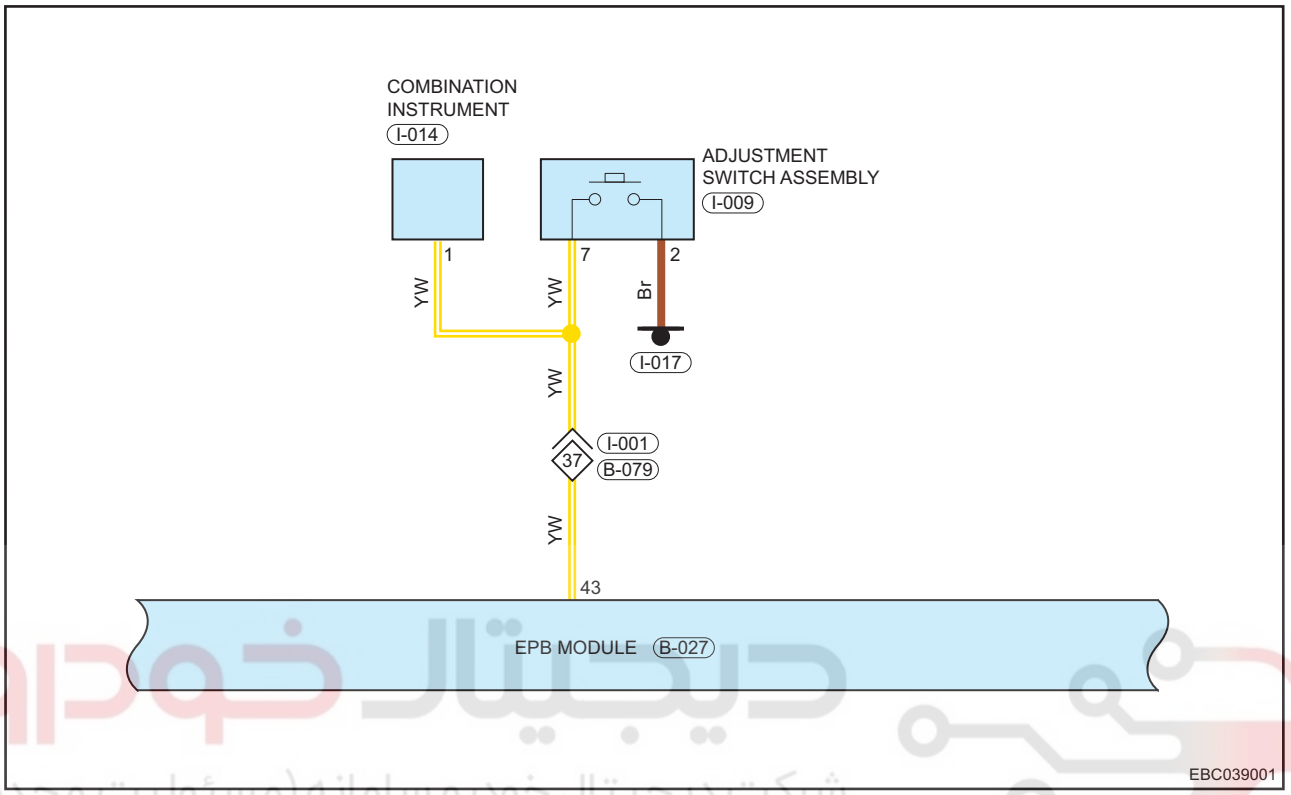

Description

DTC	DTC Definition	DTC Detection Condition	Possible Cause
C0089-04	TCS Disable Switch (ESP Only)	This DTC occurs when any of following conditions is met: • Press and hold ESP switch more than 10 seconds. • During igniting, ESP OFF switch activity signal is detected more than 2 seconds.	• ESP switch if off • ESP switch if damaged

Caution:
When performing electrical equipment diagnosis and test, always refer to circuit diagram for related circuit and component information.

21

Procedure

1	Check ESP switch

(a) Turn ENGINE START STOP switch to OFF.
(b) Disconnect the negative battery cable.
(c) Check if ESP switch is stuck or pushed in by other objects.

Result

Proceed to
OK
NG

WWW.DIGITALKHODRO.COM 021 62 99 92 92

WWW.DIGITALKHODRO.COM
021 62 99 92 92

NG → **Replace ESP switch**

OK

2	Check wire harness and connector

(a) Turn ENGINE START STOP switch to OFF.
(b) Disconnect the negative battery cable.
(c) Check if wire harnesses are worn, pierced, pinched or partially broken.
(d) Check for broken, bent, protruded or corroded terminals.
(e) Check if related connector pins are in good condition.

Result

Proceed to
OK
NG

NG → **Repair or replace body instrument panel wire harness and connector**

OK

3	Reconfirm DTCs

(a) Use diagnostic tester to clear DTCs.
(b) Start the engine.
(c) Drive vehicle at 40 km/h or above, read ABS/ESP control module assembly DTC again with diagnostic tester.
(d) Check if the same DTCs are still output.

Result

Proceed to
OK
NG

OK → **System operates normally**

NG → **Replace adjustment switch assembly**

WWW.DIGITALKHODRO.COM
021 62 99 92 92

WWW.DIGITALKHODRO.COM 021 62 99 92 92

DTC	C1000-16	ECU Voltage Supply
DTC	C1000-17	ECU Voltage Supply
DTC	C1001-04	ECU
DTC	C1009-00	ECU Hard Ware Related

Circuit Diagram

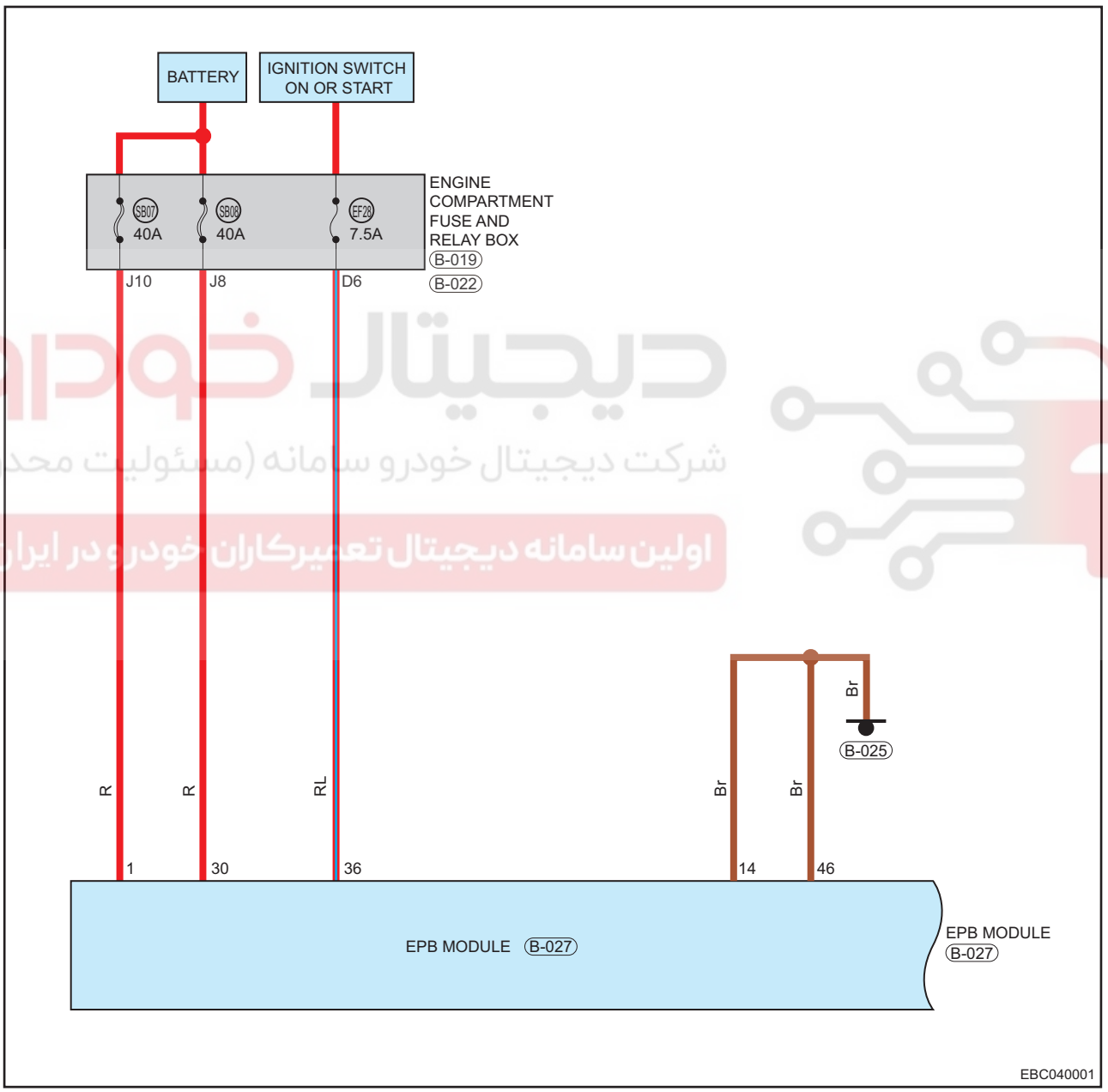

WWW.DIGITALKHODRO.COM 021 62 99 92 92

WWW.DIGITALKHODRO.COM 021 62 99 92 92

Description

DTC	DTC Definition	DTC Detection Condition	Possible Cause
C1000-16	ECU Voltage Supply	This DTC occurs when any of following conditions is met: • Battery voltage is too high. • Battery voltage is too low. • Module itself.	• Fuse malfunctions • High or low battery voltage • Charging system malfunctions. • Wire harness or connector damaged • ABS/ESP control module assembly malfunctions
C1000-17	ECU Voltage Supply		
C1001-04	ECU		
C1009-00	ECU Hard Ware Related		

Caution:
When performing electrical equipment diagnosis and test, always refer to circuit diagram for related circuit and component information.

Procedure

1	Check fuse

(a) Turn ENGINE START STOP switch to OFF.
(b) Disconnect the negative battery cable.
(c) Remove ABS fuse EF28 (7.5A) from engine compartment fuse and relay box.
(d) Check if fuse is blown.

Result

Proceed to
OK
NG

NG → **Replace ABS fuse**

OK ↓

2	Check battery

(a) Using a digital multimeter, measure voltage between positive battery terminal and negative battery terminal.
(b) Battery voltage should be higher than 12 V.

Result

Proceed to
OK
NG

NG → **Check charging system**

OK ↓

3	Check ABS/ESP control module assembly wire harness and connector

(a) Turn ENGINE START STOP switch to OFF.
(b) Disconnect the negative battery cable.
(c) Disconnect the ABS/ESP control module assembly connector B-027.
(d) Check if wire harnesses are worn, pierced, pinched or partially broken.
(e) Check for broken, bent, protruded or corroded terminals.
(f) Check if terminal contact pins of related connectors are in good condition.

WWW.DIGITALKHODRO.COM 021 62 99 92 92

WWW.DIGITALKHODRO.COM 021 62 99 92 92

Result

Proceed to
OK
NG

NG → **Repair or replace ABS/ESP control module assembly wire harness and connector**

OK

4 Check wire harness and connector (ABS/ESP control module assembly - power supply)

(a) Turn ENGINE START STOP switch to OFF.
(b) Disconnect the negative battery cable.
(c) Disconnect the ABS/ESP control module assembly connector B-027.
(d) Disconnect the negative battery cable.
(e) Turn ENGINE START STOP switch to ON.
(f) Using a digital multimeter, measure voltage between ABS/ESP control module assembly connector B-027 and body ground to check if system power supply circuit is normal according to the table below.

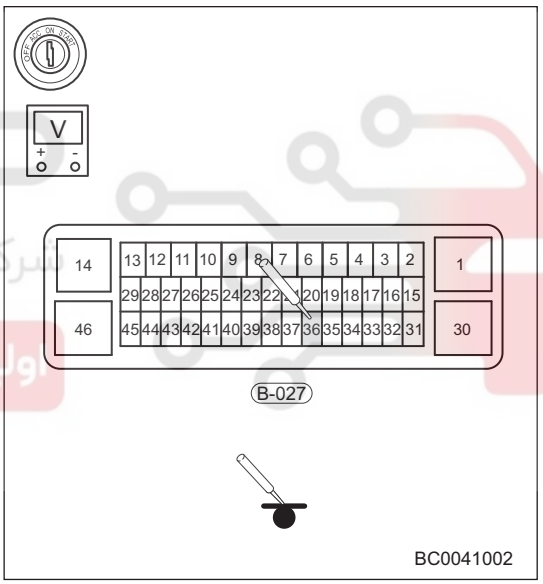

OK

Multimeter Connection	Condition	Specified Condition
B-027 (36) - Body ground (digital multimeter)	ENGINE START STOP switch is in ON	Not less than 12 V
B-027 (36) - Body ground (test lamp 21 W)	ENGINE START STOP switch is in ON	On

Result

Proceed to
OK
NG

NG → **Repair or replace related wire harness and connector**

OK

5 Check wire harness and connector (ABS/ESP control module assembly - body ground)

(a) Turn ENGINE START STOP switch to OFF.
(b) Disconnect the negative battery cable.
(c) Disconnect the ABS/ESP control module assembly connector B-123.

WWW.DIGITALKHODRO.COM 021 62 99 92 92

WWW.DIGITALKHODRO.COM 021 62 99 92 92

(d) Using a digital multimeter, check for continuity between ABS/ESP control module assembly connector B-123 and body ground to check if system ground circuit is normal according to the table below.

OK

Multimeter Connection	Condition	Specified Condition
B-027 (14) - Body ground	Always	≤ 1 Ω
B-027 (46) - Body ground	Always	≤ 1 Ω

Result

Proceed to
OK
NG

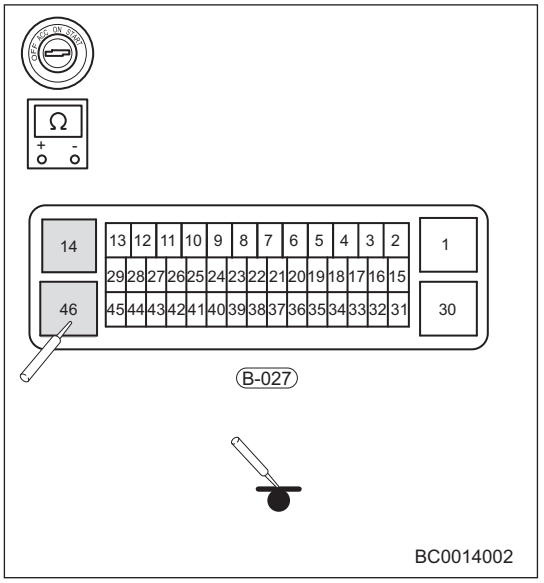

NG → **Repair or replace ABS/ESP control module assembly wire harness and connector**

OK

6 Reconfirm DTCs

(a) Use diagnostic tester to clear DTCs.
(b) Start the engine.
(c) Drive vehicle at 40 km/h or above, read ABS/ESP control module assembly DTC again with diagnostic tester.
(d) Check if the same DTCs are still output.

Result

Proceed to
OK
NG

OK → **System operates normally**

NG → **Replace ABS/ESP control module assembly**

WWW.DIGITALKHODRO.COM 021 62 99 92 92

WWW.DIGITALKHODRO.COM 021 62 99 92 92

DTC	U0005-00	High Speed CAN Communication Bus (+) High
DTC	U0007-00	High Speed CAN Communication Bus (-) Low
DTC	U0073-88	Control Module Communication Bus Off
DTC	U0100-87	Lost Communication With Engine Control System Module
DTC	U0101-87	Lost Communication With Transmission Control Unit
DTC	U0140-87	Lost Communication With Body Control Module
DTC	U0401-81	Invalid Data Received From Engine Control System Module
DTC	U0402-81	Invalid Data Received From Transmission Control Unit
DTC	U0422-81	Invalid Data Received From Body Control Module
DTC	C1002-49	CAN Hardware

WWW.DIGITALKHODRO.COM 021 62 99 92 92

WWW.DIGITALKHODRO.COM
021 62 99 92 92

Circuit Diagram

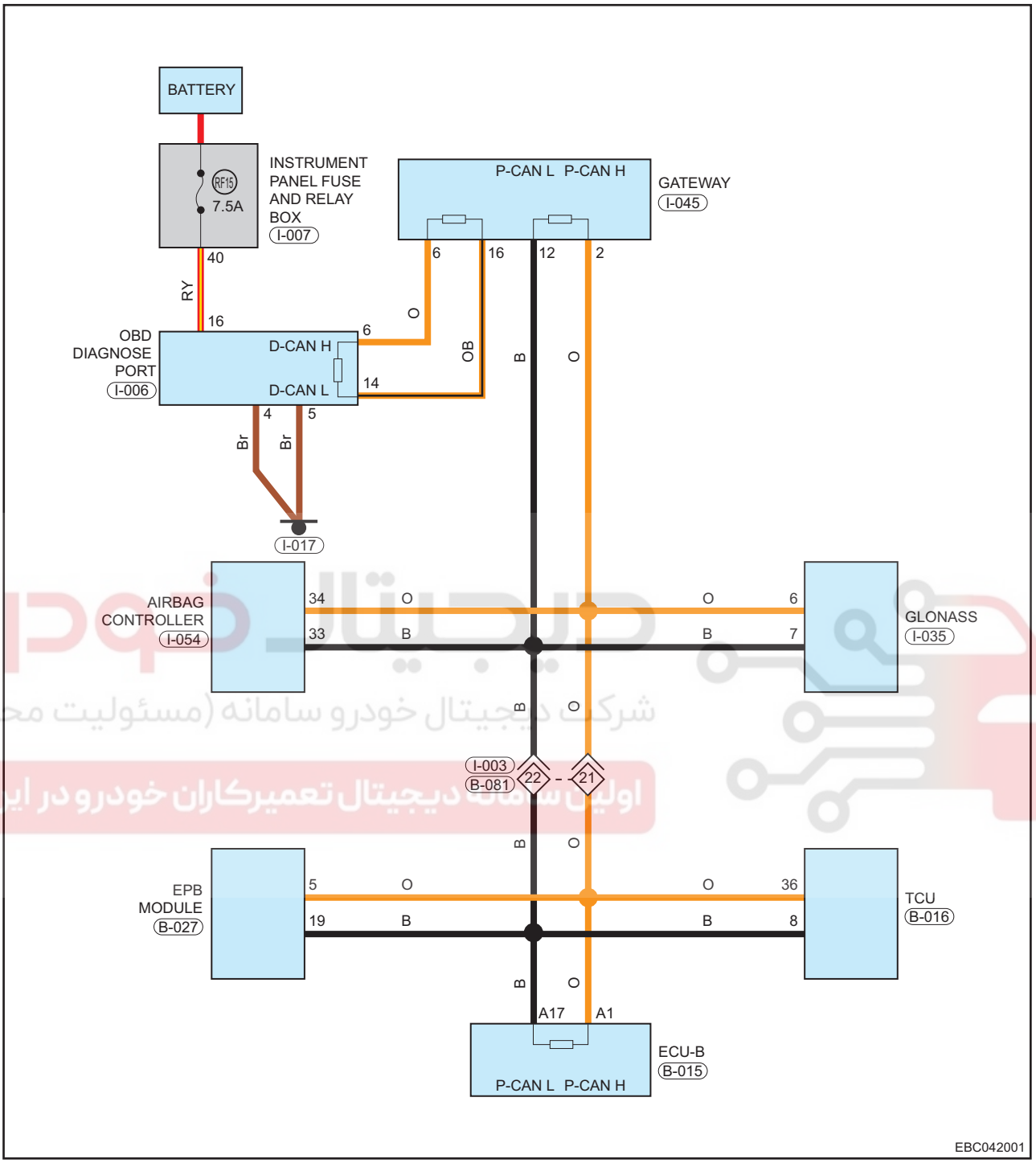

WWW.DIGITALKHODRO.COM
021 62 99 92 92

WWW.DIGITALKHODRO.COM 021 62 99 92 92

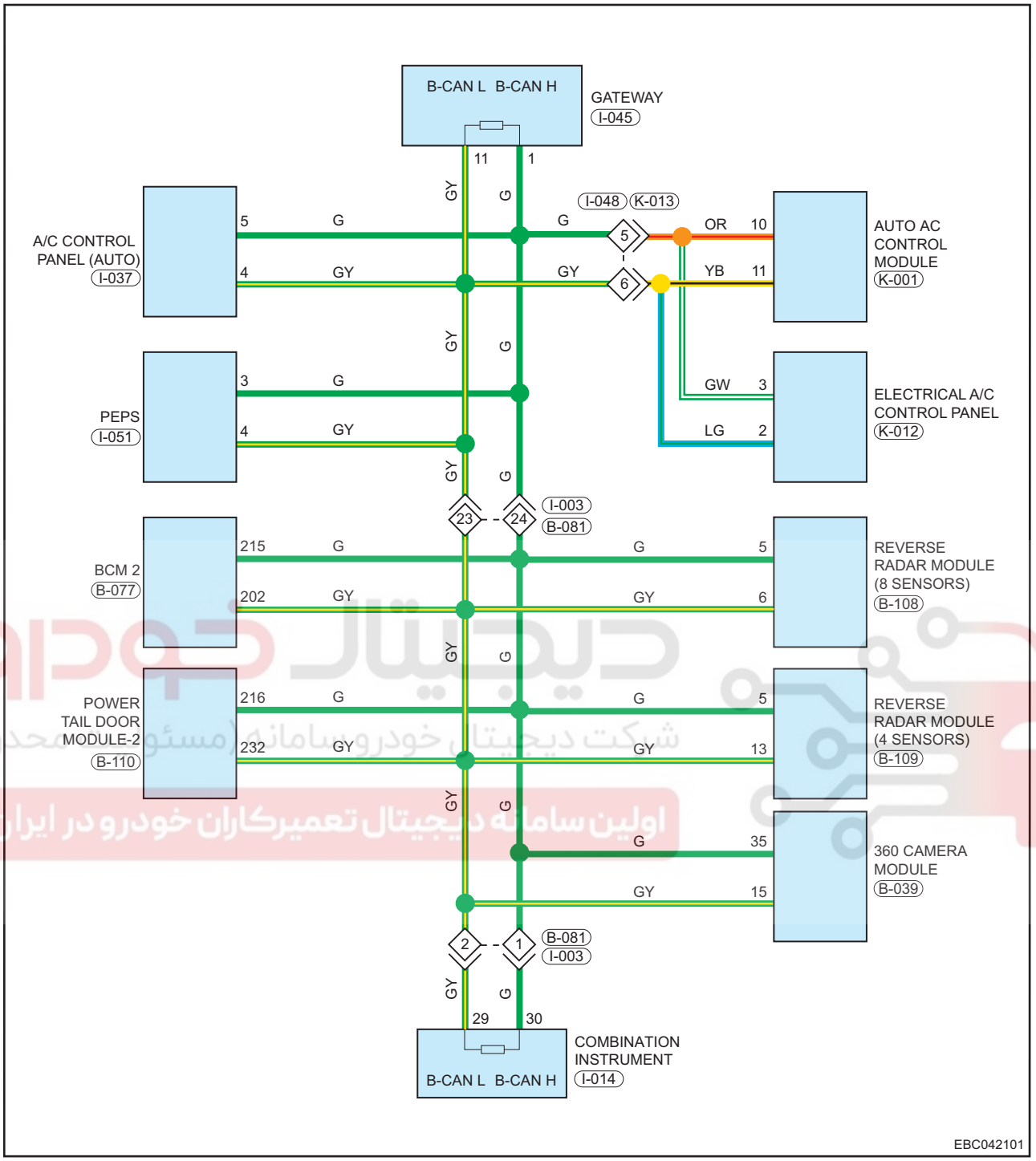

WWW.DIGITALKHODRO.COM 021 62 99 92 92

WWW.DIGITALKHODRO.COM 021 62 99 92 92

Description

DTC	DTC Definition	DTC Detection Condition	Possible Cause
U0005-00	High Speed CAN Communication Bus (+) High	This DTC occurs when any of following conditions is met: • CAN bus communication, configuration information and line are malfunctioning. • ECM overtime. • ECM error. • TCU overtime. • TCU error.	• CAN controller malfunction • CAN configuration information unmatched • CAN communication off • CAN bus line malfunction • ECM software version unmatched • ECM damaged • TCU software version unmatched • BCM damaged • ESP (ABS) damaged
U0007-00	High Speed CAN Communication Bus (-) Low		
U0073-88	Control Module Communication Bus Off		
U0100-87	Lost Communication With Engine Control System Module		
U0101-87	Lost Communication With Transmission Control Unit		
U0140-87	Lost Communication With Body Control Module		
U0401-81	Invalid Data Received From Engine Control System Module		
U0402-81	Invalid Data Received From Transmission Control Unit		
U0422-81	Invalid Data Received From Body Control Module		
C1002-49	CAN Hardware		

Caution:
When performing electrical equipment diagnosis and test, always refer to circuit diagram for related circuit and component information.

شرکت دیجیتال خودرو سامانه (مسئولیت محدود)
اولین سامانه دیجیتال تعمیرات اتومبیل در ایران

Procedure

1	Check wire harness and connector

(a) Turn ENGINE START STOP switch to OFF.
(b) Disconnect the negative battery cable.
(c) Disconnect the ABS/ESP control module assembly connector B-027.
(d) Disconnect the Engine Control Module (ECM) connector B-015.
(e) Disconnect the Body Control Module (BCM) connector B-077.
(f) Disconnect the Transmission Control Module (TCM) connector B-004.
(g) Check if wire harnesses are worn, pierced, pinched or partially broken.
(h) Check for broken, bent, protruded or corroded terminals.
(i) Check if related connector pins are in good condition.

Result

Proceed to
OK
NG

NG → **Repair or replace wire harness and connector**

OK

WWW.DIGITALKHODRO.COM 021 62 99 92 92

WWW.DIGITALKHODRO.COM 021 62 99 92 92

2	Check CAN communication control circuit (ABS/ESP control module assembly - Engine Control Module (ECM))

(a) Turn ENGINE START STOP switch to OFF.
(b) Disconnect the negative battery cable.
(c) Disconnect the ABS/ESP control module assembly connector B-027.
(d) Disconnect the Engine Control Module (ECM) connector B-028.
(e) Using a digital multimeter, measure CAN resistance value via ABS/ESP module B-123 connector to check if wire is open.

OK

Multimeter Connection	Condition	Specified Condition
B-B-027 (5) - B-027 (19)	Always	≈ 120 Ω

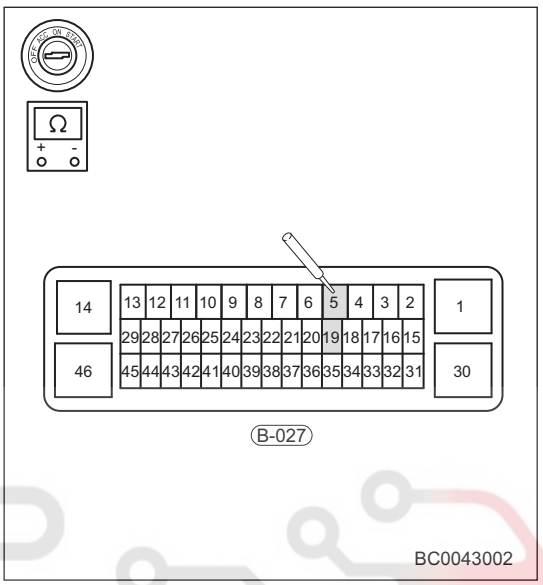

(f) Using a digital multimeter, measure CAN resistance value via ECM module B-015 connector to check if wire is open.

OK

Multimeter Connection	Condition	Specified Condition
B-015 (1) - B-015 (17)	Always	≈ 120 Ω

Result

Proceed to
OK
NG

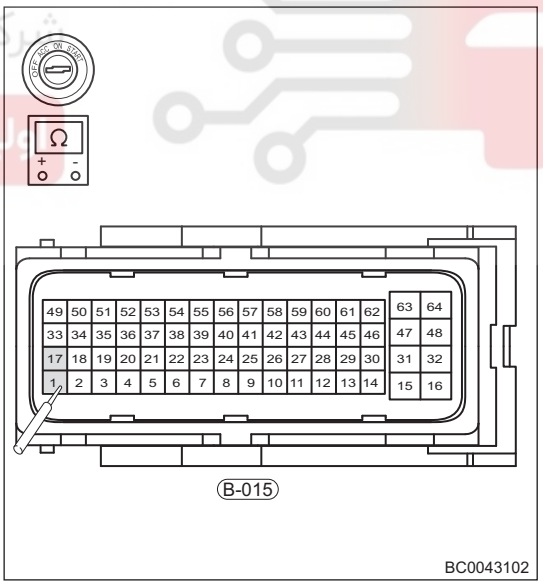

دیجیتال خودرو
شرکت دیجیتال خودرو سام (سهامی خاص)
اولین سامانه دیجیتال تعمیرکاران خودرو در ایران

NG → **Repair or replace engine wire harness and connector.**

OK

WWW.DIGITALKHODRO.COM 021 62 99 92 92

WWW.DIGITALKHODRO.COM
021 62 99 92 92

3	Check CAN communication control circuit (ABS/ESP control module assembly - Transmission Control Module (TCM))

(a) Turn ENGINE START STOP switch to OFF.
(b) Disconnect the negative battery cable.
(c) Disconnect the ABS/ESP control module assembly connector B-027.
(d) Disconnect the Transmission Control Module (TCM) connector B-004.
(e) Using a digital multimeter, measure CAN resistance value via ABS/ESP module B-027 connector to check if wire is open.

OK

Multimeter Connection	Condition	Specified Condition
B-027 (5) - B-027 (19)	Always	≈ 120 Ω

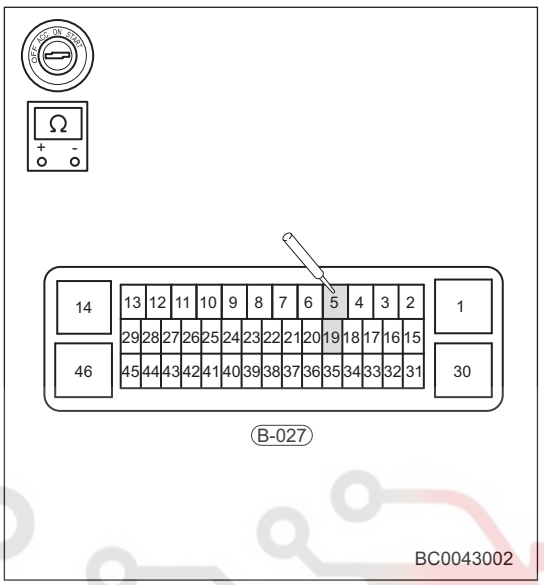

(f) Using a digital multimeter, measure CAN resistance value via TCM module B-004 connector to check if wire is open.

OK

Multimeter Connection	Condition	Specified Condition
B-004 (34) - B-004 (35)	Always	≈ 120 Ω

Result

Proceed to
OK
NG

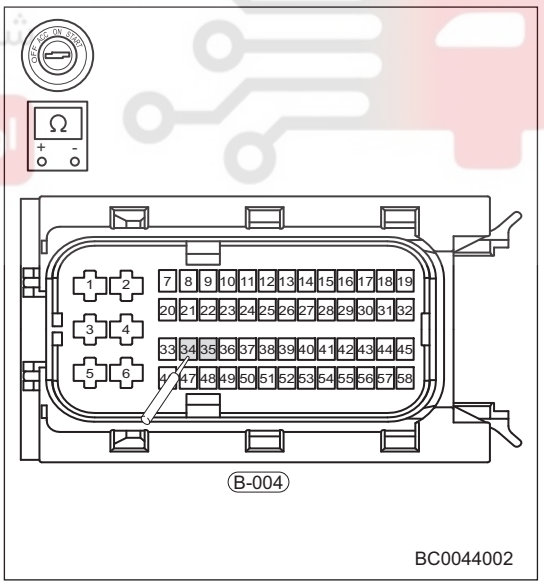

دیجیتال خودرو
شرکت پرسرعت ۱۱۰ خودرو دیجیتال پارس (سهامی خاص)
اولین سامانه دیجیتال تعمیرکاران خودرو در ایران

NG → **Repair or replace engine wire harness and connector**

OK

WWW.DIGITALKHODRO.COM
021 62 99 92 92

WWW.DIGITALKHODRO.COM 021 62 99 92 92

4	Check CAN communication control circuit (ABS/ESP control module assembly - Body Control Module (BCM))

(a) Turn ENGINE START STOP switch to OFF.
(b) Disconnect the negative battery cable.
(c) Disconnect the ABS/ESP control module assembly connector B-123.
(d) Disconnect the Body Control Module (BCM) connector B-007.
(e) Using a digital multimeter, measure CAN resistance value via ABS/ESP module B-027 connector to check if wire is open.

OK

Multimeter Connection	Condition	Specified Condition
B-027 (5) - B-027 (19)	Always	≈ 120 Ω

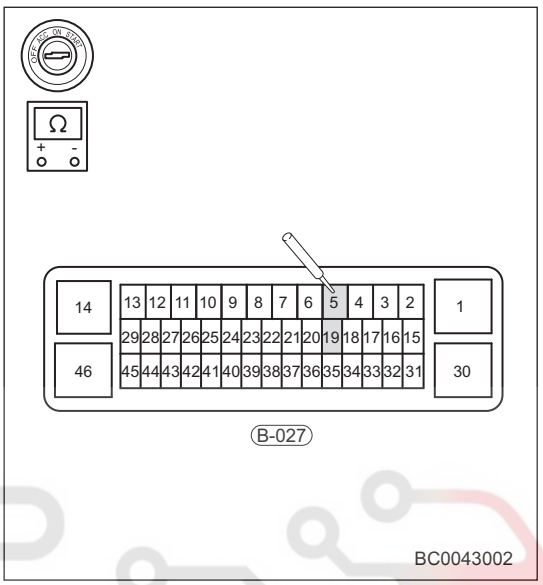

(f) Using a digital multimeter, measure CAN resistance value via BCM module B-077 connector to check if wire is open.

OK

Multimeter Connection	Condition	Specified Condition
B-077 (216) - B-077 (203)	Always	≈ 120 Ω

Result

Proceed to
OK
NG

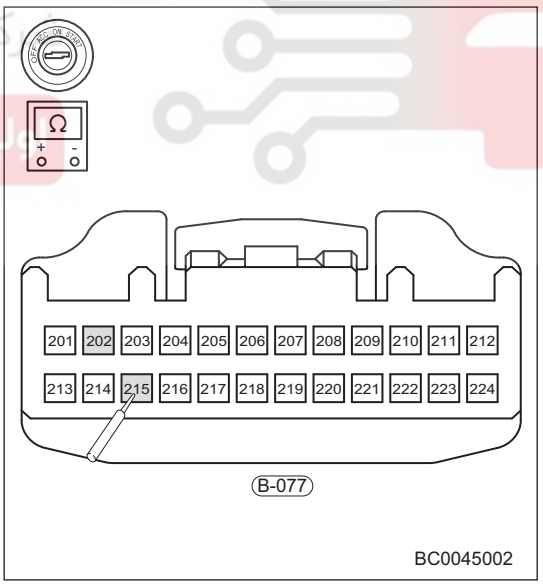

دیجیتال خودرو
اولین سامانه دیجیتال تعمیرکاران خودرو در ایران

21

OK	**Refer to CAN system**
NG	**Repair or replace body/instrument panel wire harness and connector**

WWW.DIGITALKHODRO.COM 021 62 99 92 92

WWW.DIGITALKHODRO.COM 021 62 99 92 92

ON-VEHICLE SERVICE

Brake System Bleeding

Operation Step

Warning:

- When bleeding brake system, wear safety glasses. If brake fluid gets on your eyes or skin, wash off with water completely.
- If brake fluid gets on your eyes or skin, wash off with water completely.

Caution:

- Brake fluid should meet Chery specified type (DOT4). DO NOT mix brake fluid with other types of brake fluid.
- Brake fluid has strong water absorbability, be sure to place it in the original sealed container.
- To prevent dust and other foreign matter from entering reservoir, wipe it off before removing reservoir cap.

1. Bleeding procedures for brake system with diagnostic tester are as follows:
   (a) Make sure all brake lines are installed and tightened properly.
   (b) Check that battery voltage is normal.
   (c) Turn ENGINE START STOP switch to OFF.
   (d) Connect diagnostic tester (the latest software) to Data Link Connector (DLC).
   (e) Turn ENGINE START STOP switch to ON.
   (f) Using diagnostic tester, read and clear DTCs stored in ABS/ESP control module assembly.
   (g) Using diagnostic tester, enter Brake Control System, select manual bleeding, and then perform operation according to information and procedures displayed on diagnostic tester.
   Hint:
   - If bleeder plug is open, never depress brake pedal repeatedly. Doing so will increase the amount of air in system.
   - Do not drain brake fluid from brake fluid reservoir while bleeding the system. Otherwise, low fluid level in brake reservoir will cause additional air to enter the brake system.
   - Always check brake fluid level at all times to ensure that brake fluid level in brake reservoir is always close to MAX level.

   (h) For X type brake circuit, the bleeding order is: rear left wheel, front left wheel, front right wheel, rear right wheel.
   (i) After bleeding is completed, fill brake reservoir with brake fluid to MAX level.
   (j) Drive vehicle to perform a road test, and confirm that ABS/ESP system operates normally and brake pedal feel is good.

WWW.DIGITALKHODRO.COM 021 62 99 92 92

WWW.DIGITALKHODRO.COM 021 62 99 92 92

ABS/ESP Control Module Assembly

Removal

Warning/Caution/Hint

- When repairing ABS/ESP system, first release the pressure of high pressure brake fluid in accumulator, to prevent high pressure brake fluid from spraying out and causing injury.
- Operation step: First turn off ENGINE START STOP switch, then depress and release brake pedal repeatedly, until brake pedal is hard.
- In addition, never turn on ENGINE START STOP switch before ABS/ESP system is installed completely to prevent hydraulic pump from energizing and running.

1. Turn off all electrical equipment and the ENGINE START STOP switch.
2. Disconnect the negative battery cable.
3. Drain the brake fluid (See page 22-12).

   Hint:
   - Drained brake fluid should be well kept in a container. Never discard it at will.

   Warning:
   - Wash off brake fluid immediately if it comes in contact with any paint surface.
4. Remove the engine trim cover assembly.
5. Remove the battery assembly (See page 14-8).
6. Remove the air filter assembly (See page 08-9).
7. Remove the ABS/ESP control module assembly.

   (a) Press the lock area of ABS/ESP control module assembly connector, toggle the connector lock bracket downward and disconnect the ABS/ESP control module assembly connector (arrow).

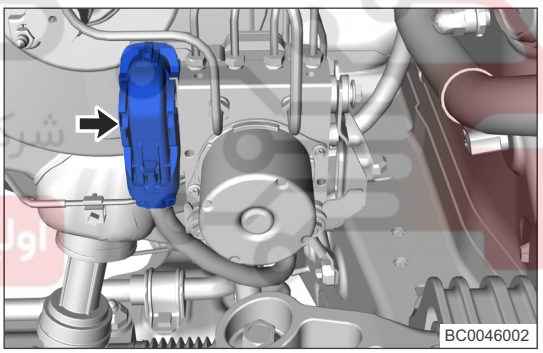

   (b) Using a fixing wrench, carefully disconnect 6 brake pipe coupling bolts (arrow).

   Tightening torque
   18 ± 2 N·m

   Warning:
   - When removing brake line, prevent foreign matter form entering ABS/ESP control module assembly threaded holes.
   - After disconnecting brake line, sealing measure should be taken to prevent foreign matter form entering.

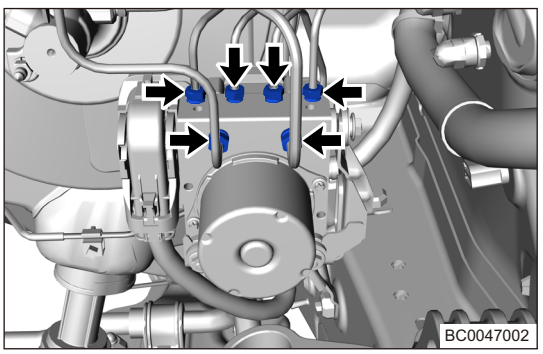

شرکت دیجیتال خودرو سامانه (مسئولیت محدود)
اولین سامانه دیجیتال تعمیرکاران خودرو در ایران

WWW.DIGITALKHODRO.COM 021 62 99 92 92

WWW.DIGITALKHODRO.COM 021 62 99 92 92

(c) Remove fixing bolt (arrow) between ABS/ESP control module assembly mounting bracket and body.

Tightening torque
23 ± 3.5 N·m

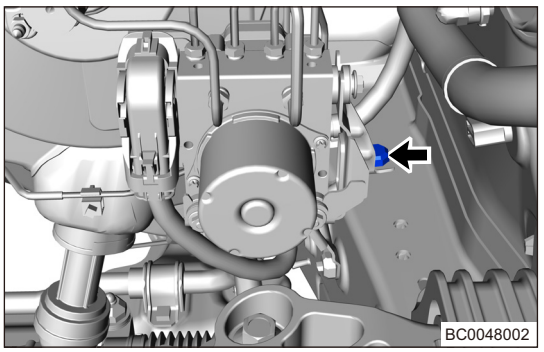

(d) Remove coupling bolts (arrow) between ABS/ESP control module assembly mounting bracket and body.

Tightening torque
23 ± 3.5 N·m

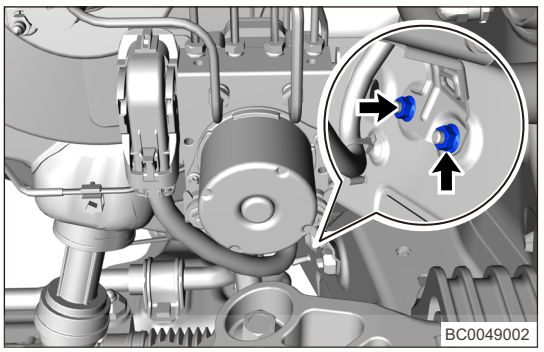

(e) Remove the ABS/ESP control module assembly with mounting bracket.

Disassembly

1. Remove the ABS/ESP control module assembly.

(a) Remove 3 fixing nuts (arrow) between ABS/ESP control module assembly and mounting bracket.

Tightening torque
8 ± 2 N·m

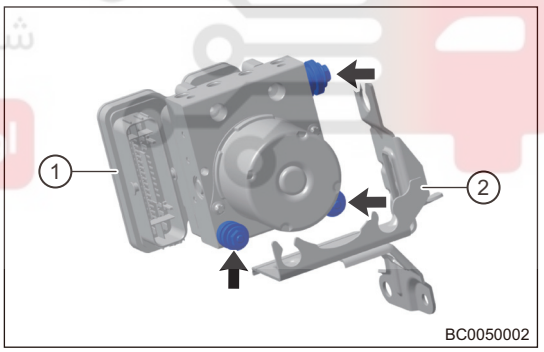

(b) Disengage ABS/ESP control module assembly (1) from mounting bracket (2).

Installation

1. Installation is in the reverse order of removal.

Caution:

- ABS/ESP control module assembly contains hydraulic control module and electronic control module. As a unit, they cannot be repaired or replaced individually.
- Check insulator for aging or damage. Replace if necessary.
- When installing fixing bolts and screws, be sure to tighten to specified torques.
- Perform ABS bleeding procedures for brake system after completing installation.
- Using diagnostic tester, enter brake control system, record and clear trouble code, then drive vehicle to perform a road test, confirming that ABS/ESP system operates normally and brake pedal feel is good.
- It is necessary to perform yaw rate sensor calibration after replacing ESP assembly.
- After replacing ESP assembly, perform "Assembly Inspection" with diagnostic tester, otherwise, malfunction may be lit.

WWW.DIGITALKHODRO.COM 021 62 99 92 92

WWW.DIGITALKHODRO.COM 021 62 99 92 92

Front Wheel Speed Sensor (Front Left Wheel as Example)

Removal

Warning/Caution/Hint

Caution:

- Keep wheel speed sensor away from oil or other foreign matter. Otherwise speed signal generated by wheel speed sensor may be inaccurate, and system may even fail to operate normally.

Hint:

- Use same procedures for right and left sides.
- Procedures listed below are for left side.

1. Turn off all electrical equipment and ENGINE START STOP switch.
2. Disconnect the negative battery cable.
3. Remove the front left wheel (See page 20-8).
4. Remove the front left wheel speed sensor.

(a) Remove the fixing bolt (arrow) between front left wheel speed sensor and front left steering knuckle assembly, and disengage the front left wheel speed sensor carefully.

Tightening torque
9 ± 1.5 N·m

Caution:

- Keep head and installation hole of sensor free of foreign matter.

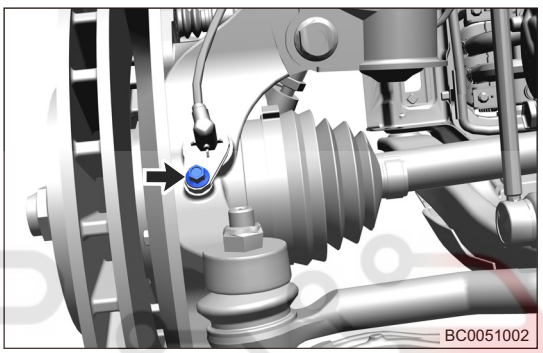

(b) Disengage the attachment part (arrow) of front left wheel speed sensor wire harness from front left shock absorber assembly and fixing bracket, disengage fixing clip (1) from front left wheel speed sensor wire harness.

Hint:

- Observe winding direction of sensor wire harness to prevent incorrect installation.

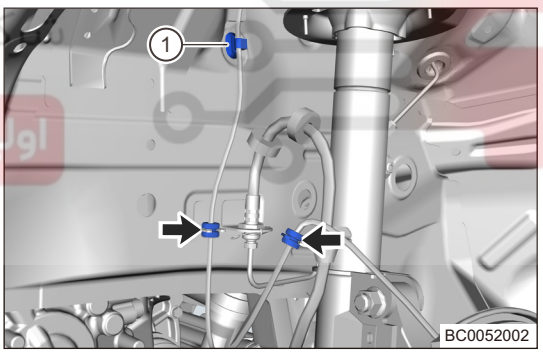

(c) Disconnect the front left wheel speed sensor wire harness connector (arrow).

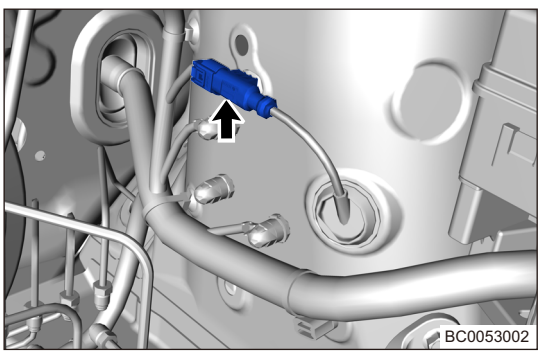

WWW.DIGITALKHODRO.COM 021 62 99 92 92

WWW.DIGITALKHODRO.COM
021 62 99 92 92

(d) Detach the front left wheel speed sensor wire harness cover (arrow) from body.

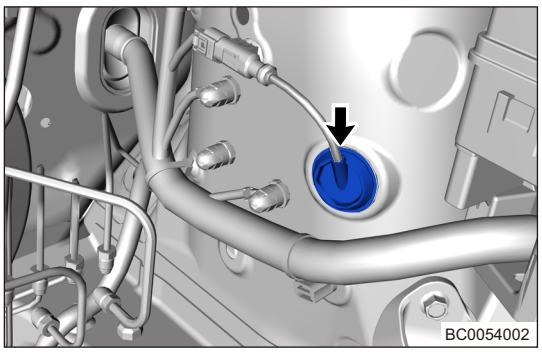

(e) Remove the front left wheel speed sensor.

Inspection

1. Check the rear wheel speed sensor.
   (a) Check rear wheel speed sensor surface for breakage, dents or notch.
   (b) Check rear wheel speed sensor connector or wire harness for scratches, breakage or damage.
   (c) If any of above conditions occurs, replace the rear wheel speed sensor with a new one.
   (d) Check wheel speed sensor for proper installation.
   (e) Using a diagnostic tester, read datastream of wheel speed sensor, record if each wheel speed is consistent with acceleration display, and if vehicle speed display is accurate.

دیجیتال خودرو
شرکت دیجیتال خودرو سامانه (مسئولیت محدود)
اولین سامانه دیجیتال تعمیرکاران خودرو در ایران

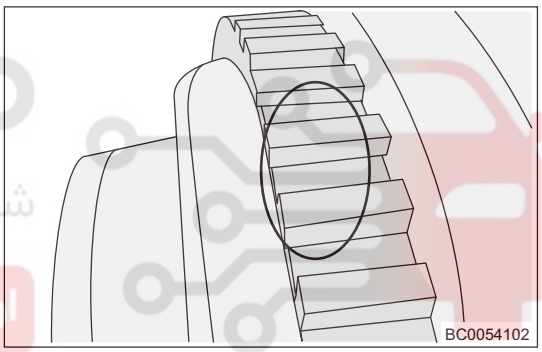

(f) If wheel speed display is inconsistent, check the corresponding wheel speed sensor signal ring gear for missing teeth, dirt, demagnetization, off center.

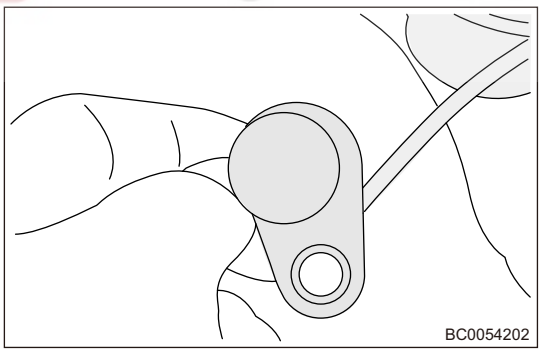

2. Simple test for wheel speed sensor
   (a) Connect power supply terminal of sensor to 12 V power supply, connect sensor signal terminal and 75 Ω resistor in series and make it grounded, then rotate wheels and test voltage signal of resistor with an oscilloscope.

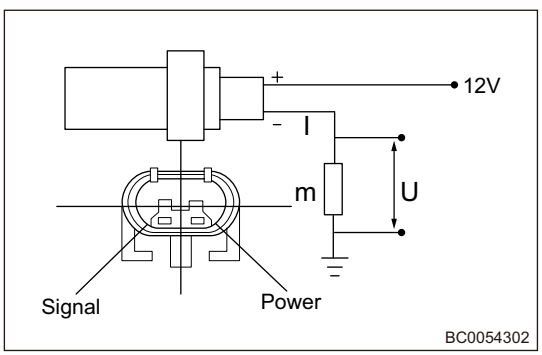

WWW.DIGITALKHODRO.COM
021 62 99 92 92

WWW.DIGITALKHODRO.COM 021 62 99 92 92

(b) U switches between high and low levels without any obvious teeth missing as ring gear rotates.
U low ≈ 0.54 V
U high ≈ 1.07 V

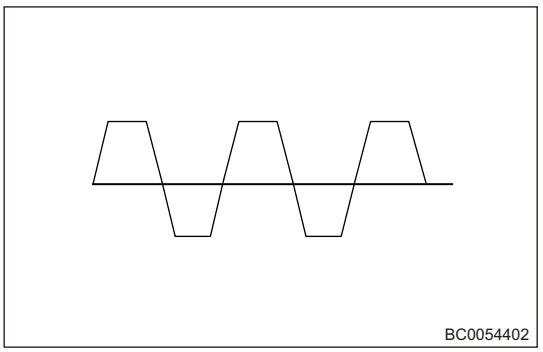

Caution:
- Poles cannot be connected inversely during test, otherwise, damage may be caused.
- Above mentioned is a simple method and cannot replace the complete function test.
- Causes that affect test may include: Ring gear quality, installation error, etc.

(c) After any repair actions on wheel speed sensor, it is necessary to accelerate vehicle to 40 km/h or more to perform dynamic self-test of ABS/ESP system.

(d) If malfunction still cannot be eliminated after completing dynamic self-test, replace wheel speed sensor.

(e) After repair is finished, perform completion inspection.

Installation

1. Installation is in the reverse order of removal.

Caution:
- When installing coupling bolts, be sure to tighten to specified torque.

دیجیتال خودرو
شرکت دیجیتال خودرو سامانه (مسئولیت محدود)
اولین سامانه دیجیتال تعمیرکاران خودرو در ایران

WWW.DIGITALKHODRO.COM 021 62 99 92 92

WWW.DIGITALKHODRO.COM
021 62 99 92 92

Rear Wheel Speed Sensor (Rear Left Wheel as Example)

Removal

Warning/Caution/Hint

Caution:

- Keep wheel speed sensor away from oil or other foreign matter. Otherwise speed signal generated by wheel speed sensor may be inaccurate, and system may even fail to operate normally.

Hint:

- Use same procedures for right and left sides.
- Procedures listed below are for left side.

1. Turn off all electrical equipment and the ENGINE START STOP switch.
2. Disconnect the negative battery cable
3. Remove the rear left wheel (See page 20-8).
4. Remove the rear left wheel speed sensor.

(a) Remove rear left wheel speed sensor fixing bolt (arrow), and disconnect EPB caliper wire harness connector (1).

Tightening torque
9 ± 1.5 N·m

Caution:

- Keep head and installation hole of sensor free of foreign matter.

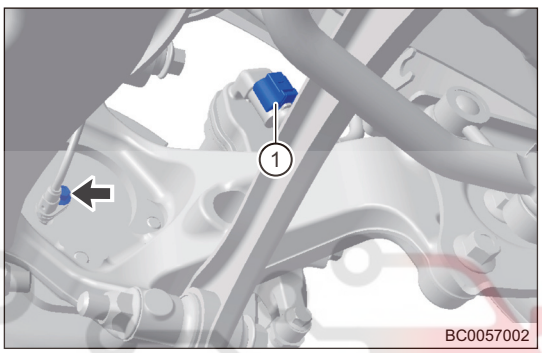

(b) Detach the attachment parts (arrow) of rear wheel speed sensor with caliper wire harness assembly from fixing bracket.

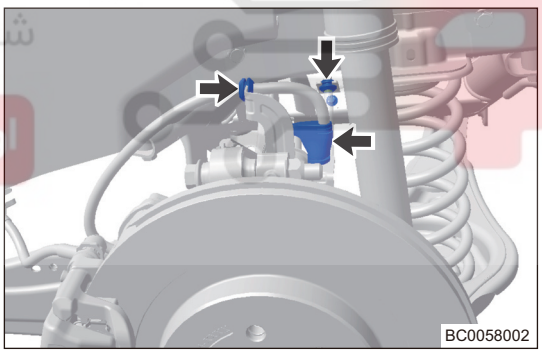

(c) Remove the third row seat assembly.
(d) Lift up the front floor carpet assembly.
(e) Disconnect rear wheel speed sensor with caliper wire harness assembly connector and wire harness clips (arrow), and detach rubber plug (1) from vehicle body.

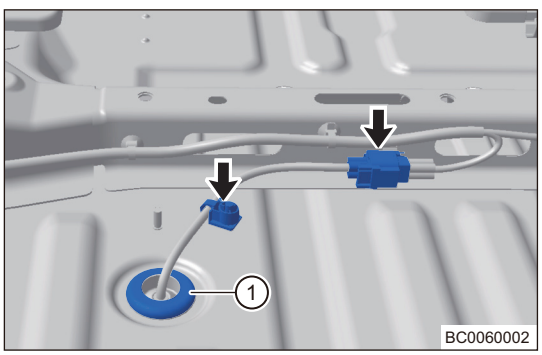

(f) Remove the rear left wheel speed sensor.

WWW.DIGITALKHODRO.COM
021 62 99 92 92

WWW.DIGITALKHODRO.COM 021 62 99 92 92

Inspection

1. Check the rear left wheel speed sensor.
   (a) Check rear wheel speed sensor surface for breakage, dents or notch.
   (b) Check rear wheel speed sensor connector or wire harness for scratches, breakage or damage.
   (c) If any of above conditions occurs, replace the rear wheel speed sensor with a new one.
   (d) Check wheel speed sensor for proper installation.
   (e) Using a diagnostic tester, read data flow of wheel speed sensor, record if each wheel speed is consistent with acceleration display, and if vehicle speed display is accurate.

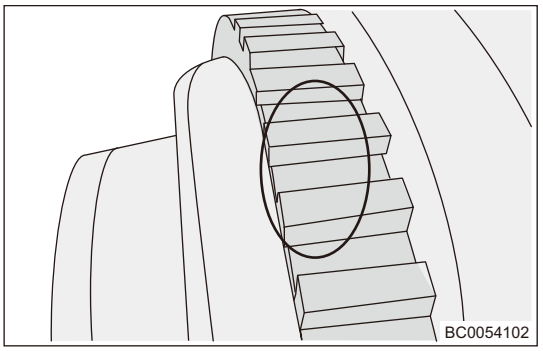

   (f) If wheel speed display is inconsistent, check the corresponding wheel speed sensor signal ring gear for missing teeth, dirt, demagnetization, off center.

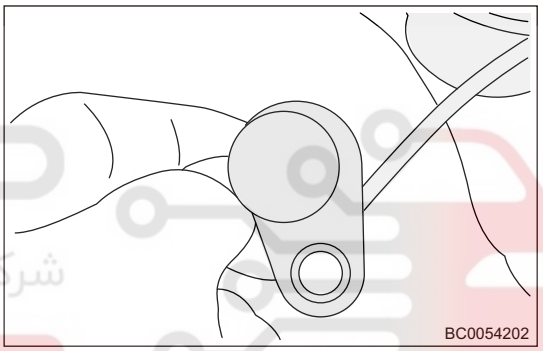

دیجیتال خودرو
شرکت دیجیتال خودرو سامانه (مسئولیت محدود)
اولین سامانه دیجیتال مدیریت خودرو در ایران

2. Simple test for wheel speed sensor
   (a) Connect power supply terminal of sensor to 12 V power supply, connect sensor signal terminal and 75 Ω resistor in series and make it grounded, then rotate wheels and test voltage signal of resistor with an oscilloscope.

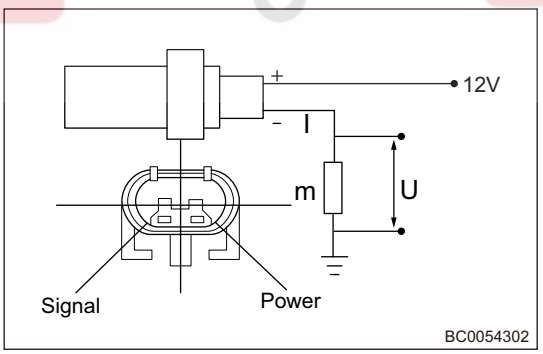

   (b) U switches between high and low levels without any obvious teeth missing as ring gear rotates.
   U low ≈ 0.54 V
   U high ≈ 1.07 V

   Caution:
   - Poles cannot be connected inversely during test, otherwise, damage may be caused.
   - Above mentioned is a simple method and cannot replace the complete function test.
   - Causes that affect test may include: Ring gear quality, installation error, etc.

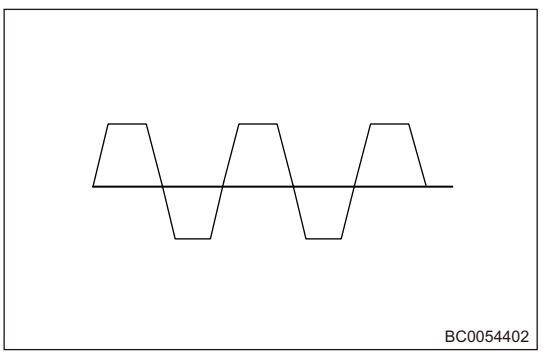

WWW.DIGITALKHODRO.COM 021 62 99 92 92

WWW.DIGITALKHODRO.COM 021 62 99 92 92

(c) After any repair actions on wheel speed sensor, it is necessary to accelerate vehicle to 40 km/h or more to perform dynamic self-test of ABS/ESP system.
(d) If malfunction still cannot be eliminated after completing dynamic self-test, replace wheel speed sensor.
(e) After repair is finished, perform completion inspection.

Installation

1. Installation is in the reverse order of removal.
   Caution:
   - When installing coupling bolts, be sure to tighten to specified torque.

دیجیتال خودرو
شرکت دیجیتال خودرو سامانه (مسئولیت محدود)
اولین سامانه دیجیتال تعمیرکاران خودرو در ایران

WWW.DIGITALKHODRO.COM 021 62 99 92 92

WWW.DIGITALKHODRO.COM 021 62 99 92 92

Steering Angle Sensor

Removal

1. Turn off all electrical equipment and the ENGINE START STOP switch.
2. Disconnect the negative battery cable.

   Caution:
   - Wait at least 90 seconds after disconnecting the negative battery cable to disable supplementary restraint system.
3. Position the front wheels straight ahead.
4. Remove the steering wheel assembly (See page 24-20).
5. Remove the combination switch cover.
6. Remove the steering angle sensor.

   (a) Disconnect the spiral cable wire harness connector (arrow) and angle sensor connector (1).

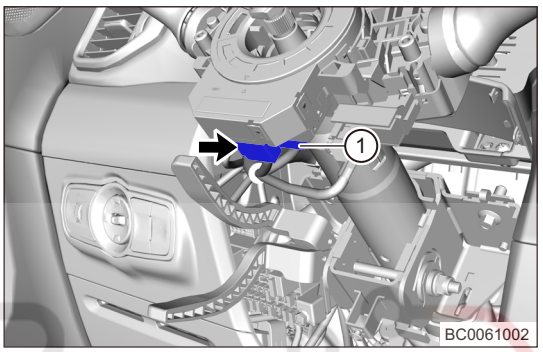

   (b) Detach the fixing claws (arrow) between spiral cable and steering column, and remove the spiral cable.

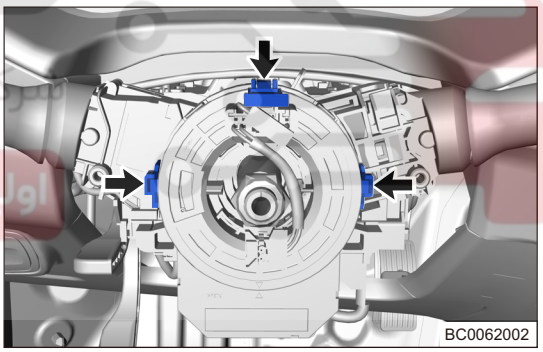

   (c) Detach the steering angle sensor fixing claws and separate the angle sensor (1) and spiral cable (2).

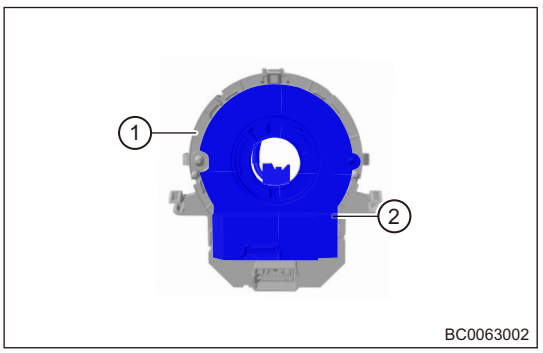

شرکت دیجیتال خودرو سامانه (مسئولیت محدود)
اولین سامانه دیجیتال تعمیرکاران خودرو در ایران

WWW.DIGITALKHODRO.COM 021 62 99 92 92

WWW.DIGITALKHODRO.COM 021 62 99 92 92

Installation

1. Installation is in the reverse order of removal.

   Hint:

   - Always install spiral cable correctly according to matchmarks on spiral cable and steering column (fully turn spiral cable clockwise slowly, then turn it counterclockwise until yellow ball appears in transparent neutral window and arrow marks align with each other), otherwise the spiral cable may be damaged.

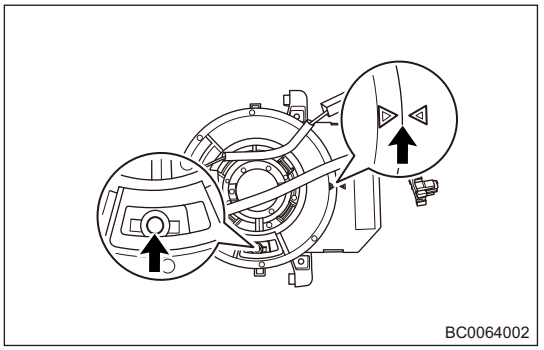

   Caution:

   - Always install spiral cable correctly according to specified operating instructions.
   - DO NOT rotate the spiral cable over specified turns to prevent it from breaking.
   - Be sure to install fixing claws in place when installing spiral cable.
   - Check that horn operates normally after installation.
   - Check SRS warning light after installation, and make sure that supplemental restraint system operates normally.
   - It is necessary to adjust front wheel alignment.

دیجیتال خودرو
شرکت دیجیتال خودرو سامانه (مسئولیت محدود)
اولین سامانه دیجیتال تعمیرکاران خودرو در ایران

WWW.DIGITALKHODRO.COM 021 62 99 92 92

- MEMO -

دیجیتال خودرو
شرکت دیجیتال خودرو سامانه (مسئولیت محدود)
اولین سامانه دیجیتال تعمیرکاران خودرو در ایران

WWW.DIGITALKHODRO.COM 021 62 99 92 92

BRAKE

GENERAL INFORMATION 22-3
- **Overview 22-3**
  - Description 22-3
  - Specifications 22-4
  - Tools 22-5

DIAGNOSIS & TESTING 22-7
- **Diagnosis Content 22-7**
  - Problem Symptoms Table 22-7
- **On-vehicle Inspection 22-8**
  - Operation Step 22-8

ON-VEHICLE SERVICE 22-9
- **Brake Bleeding 22-9**
  - Operation Step 22-9
- **Brake Fluid Replacement 22-12**
  - Operation Step 22-12
- **Brake Fluid Reservoir Assembly 22-13**
  - On-vehicle Inspection 22-13
  - Removal 22-13
  - Installation 22-14
- **Brake Master Cylinder Assembly 22-15**
  - Removal 22-15
  - Installation 22-16
- **Vacuum Booster with Brake Master Cylinder Assembly 22-17**
  - On-vehicle Inspection 22-17
  - Removal 22-18
  - Inspection 22-19
  - Installation 22-19
- **Brake Pedal Assembly 22-20**
  - Removal 22-20
  - Inspection 22-21
  - Installation 22-21
- **Front Disc Brake Assembly 22-23**
  - Description 22-23
  - On-vehicle Inspection 22-23
  - Removal 22-24
  - Disassembly 22-25
  - Inspection 22-26
  - Assembly 22-27
  - Installation 22-29
- **Front Brake Hose Assembly 22-30**
  - Removal 22-30
  - Installation 22-31
- **Rear Disc Brake Assembly 22-32**
  - Description 22-32
  - On-vehicle Inspection 22-33
  - Removal 22-33
  - Disassembly 22-34
  - Inspection 22-36
  - Assembly 22-37
  - Installation 22-39
- **Rear Brake Hose Assembly 22-40**
  - Removal 22-40
  - Installation 22-40

شرکت دیجیتال خودرو سامانه (مسئولیت محدود)
این سامانه دیجیتال تعمیرات خودروهای ایران

WWW.DIGITALKHODRO.COM 021 62 99 92 92

دیجیتال خودرو
شرکت دیجیتال خودرو سامانه (مسئولیت محدود)
اولین سامانه دیجیتال تعمیرکاران خودرو در ایران

WWW.DIGITALKHODRO.COM 021 62 99 92 92

GENERAL INFORMATION

Overview

Description

Front Ventilated Disc Brake Assembly

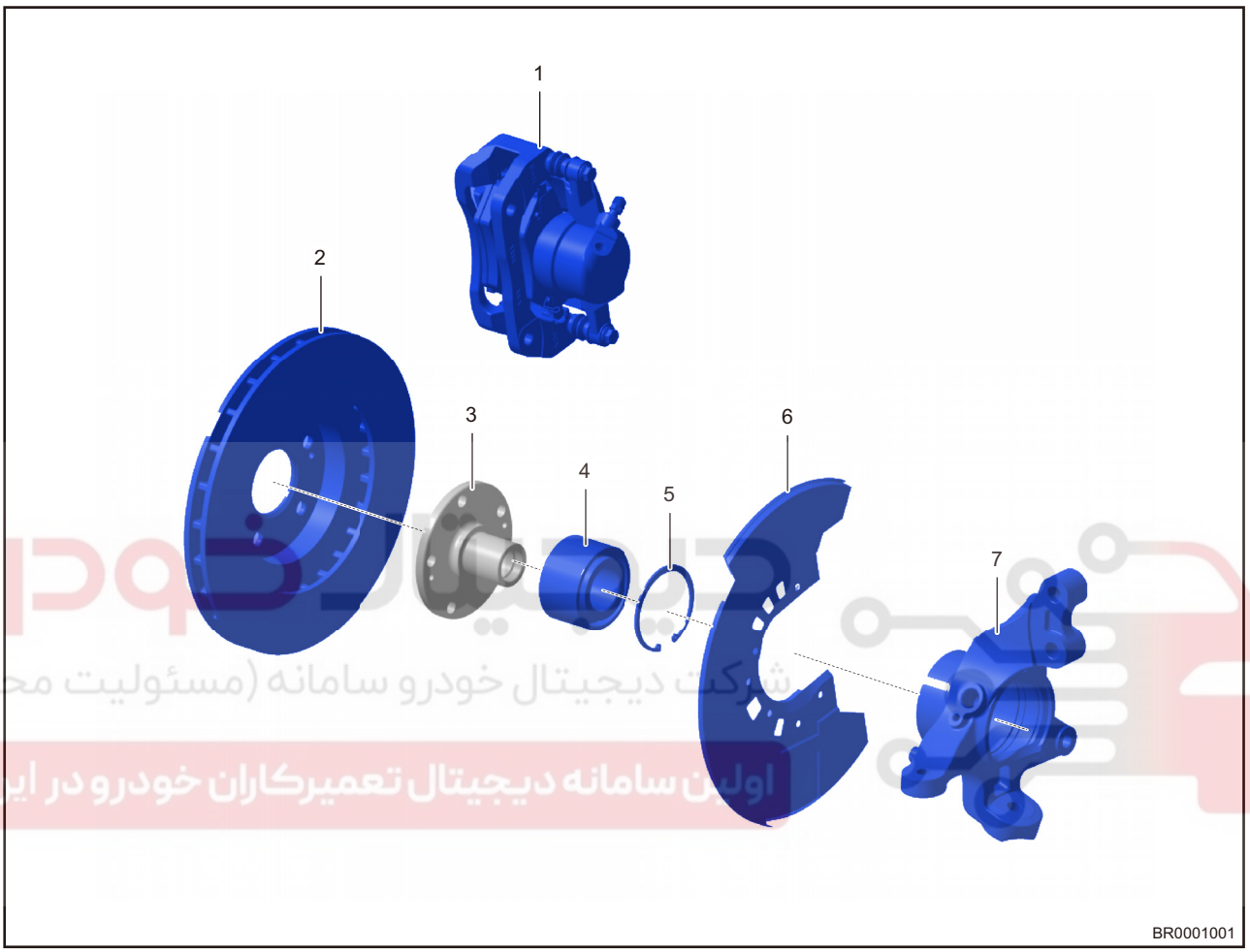

1 - Front Brake Caliper Assembly	2 - Front Brake Disc
3 - Front Hub	4 - Front Hub Bearing
5 - Bearing Retainer	6 - Front Dust Guard
7 - Front Steering Knuckle	

WWW.DIGITALKHODRO.COM 021 62 99 92 92

WWW.DIGITALKHODRO.COM 021 62 99 92 92

Rear Solid Disc Brake Assembly

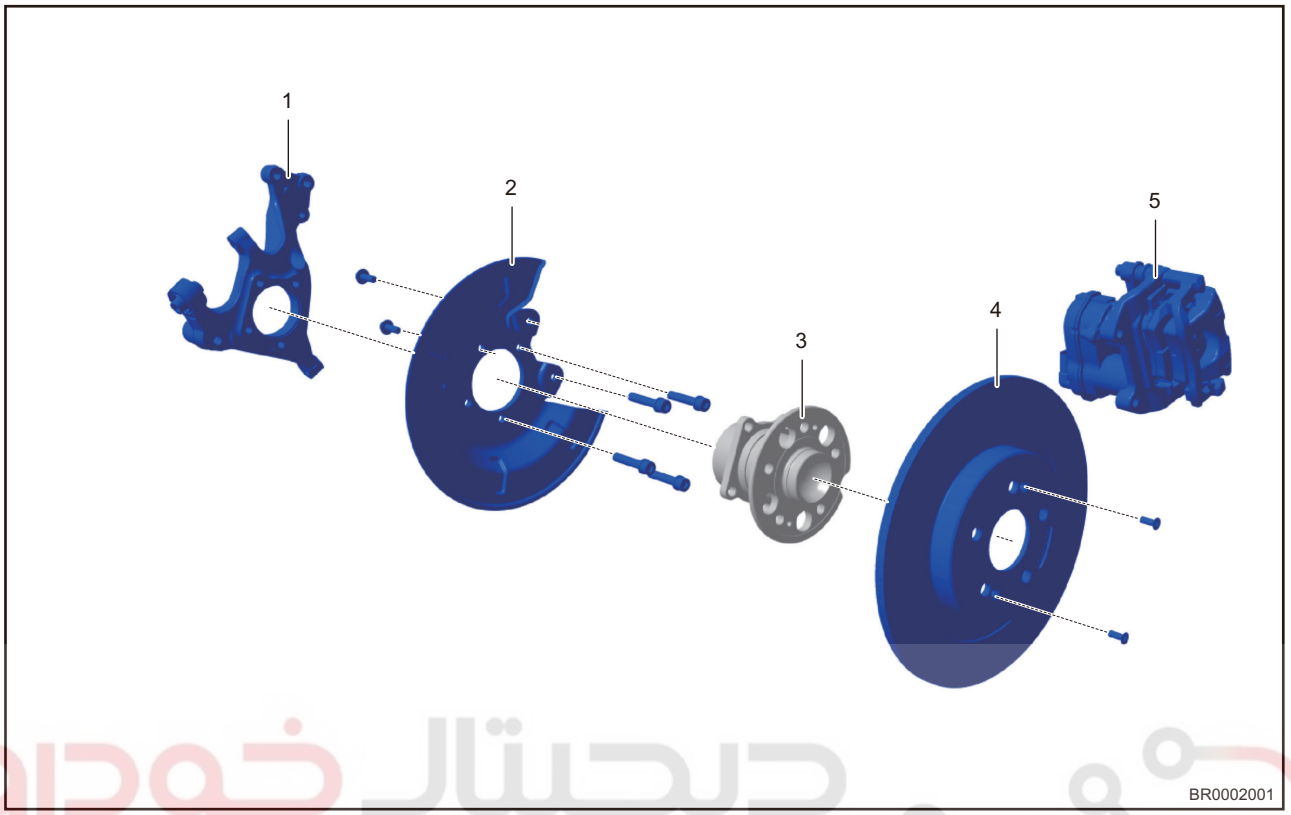

1 - Rear Steering Knuckle	2 - Rear Dust Guard
3 - Rear Hub Bearing Assembly	4 - Rear Brake Disc
5 - Rear Brake Caliper Assembly	

Brake system uses the following configuration: a ventilated disc brake is used for each front wheel, and solid disc brake is used for each rear wheel (disc brake is used for service brake, and electric parking is used for parking brake).
Using lever principle, brake pedal pushes the pushrod into vacuum booster, which boosts the force of pushrod by using vacuum and then transmits the force to brake master cylinder assembly. Hydraulic pressure, produced in the brake master cylinder assembly, is transmitted to ABS Hydraulic Control Unit (HCU) through the brake line, and then distributed to individual brake calipers. Brake calipers apply force to brake linings using hydraulic pressure. Brake linings will cause wheel speed to decrease or stop depending on the amount of brake pressure applied.

Specifications

Torque Specifications

Description	Torque (N·m)
Wheel Mounting Bolt	110 ± 10
Master Cylinder Mounting Nut	13.7 ~ 21.6
Fixing Plug Between Brake Master Cylinder Assembly and Brake Pipe	18 ± 2
Fixing Nut Between Vacuum Booster Assembly and Brake Pedal Assembly	23 ± 2
Fixing Nut Between Brake Pedal Assembly and Body	23 ± 2
Coupling Plug Between Front Brake Caliper Assembly and Front Brake Hose Assembly	20 ± 2
Coupling Bolt Between Front Brake Caliper Assembly and Front Steering Knuckle Assembly	90 ~ 110
Front Brake Disc Locating Screw	4.5 ± 0.5

WWW.DIGITALKHODRO.COM 021 62 99 92 92

WWW.DIGITALKHODRO.COM 021 62 99 92 92

Description	Torque (N·m)
Front Brake Caliper Bleeder Screw	9 ~ 11
Guide Bolt Between Front Brake Caliper Fixing Bracket and Front Brake Cylinder Assembly	22 ~ 32
Coupling Plug Between Front Brake Hose Assembly and Front Brake Pipe	18 ± 2
Coupling Bolt Between Rear Brake Caliper Assembly and Rear Brake Hose Assembly	27 ± 2
Coupling Bolt Between Rear Brake Caliper Assembly and Brake Caliper Mounting Board Assembly	90 ~ 110
Rear Brake Disc Locating Screw	4.5 ± 0.5
Rear Brake Caliper Bleeder Screw	9 ~ 11
Guide Bolt Between Rear Brake Caliper Fixing Bracket and Rear Brake Cylinder Assembly	22 ~ 32
Coupling Plug Between Rear Brake Hose Assembly and Brake Pipe	18 ± 2
Parking Actuator Mechanism Fixing Screw	9 ~ 11

Front Disc Brake

Description	Standard Thickness (mm)	Minimum Thickness (mm)	Brake Disc Runout (mm)
Front Brake Disc	25	23	Less than 0.06
Front Brake Lining	11	2	-

Rear Disc Brake

Description	Standard Thickness (mm)	Minimum Thickness (mm)	Brake Disc Runout (mm)
Rear Brake Disc	10	8	Less than 0.06
Rear Brake Lining	10.2	2	-

شرکت دیجیتال خودرو سامانه (مسئولیت محدود)
اولین سامانه دیجیتال تعمیرکاران خودرو در ایران

Tools

Special Tool

G Type Pliers	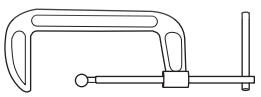 093

WWW.DIGITALKHODRO.COM 021 62 99 92 92

WWW.DIGITALKHODRO.COM 021 62 99 92 92

General Tools

Rear Brake Cylinder Release Tool	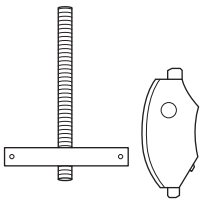 116
Dial Indicator and Magnetic Holder	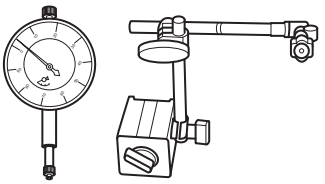 023
Vernier Caliper	019
Digital Multimeter	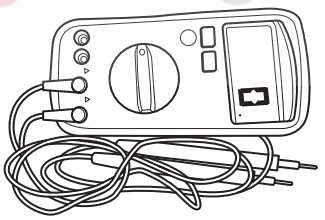 002

دیجیتال خودرو
شرکت دیجیتال خودرو سامانه (مسئولیت محدود)
اولین سامانه دیجیتال تعمیرکاران خودرو در ایران

WWW.DIGITALKHODRO.COM 021 62 99 92 92

WWW.DIGITALKHODRO.COM 021 62 99 92 92

DIAGNOSIS & TESTING

Diagnosis Content

Problem Symptoms Table

Hint:
Use symptoms table below to help determine cause of problem. Check each suspected area in sequence. Repair or adjust faulty components, or replace as necessary.

Symptom	Possible Cause	Corresponding Measures
Brake shakes	Brake disc thickness is out of limit thickness	Check brake disc thickness difference
	Real brake disc runout is out of limit amount	Check real brake disc runout
	Hub bearing is damaged or worn	Check bearing damage
	Brake assembly bolt becomes loose	Check looseness of brake assembly bolt
	Steering/suspension part is loose or worn	Check in accordance with Repair Manual
	Tire dynamic balance	Check in accordance with Repair Manual
	Four-wheel alignment	Check in accordance with Repair Manual
	ABS operates	Check in accordance with Repair Manual
Abnormal noise occurs on bumpy road	Spring plate is worn or deformed	Check spring plate
	Brake assembly bolt becomes loose	Check looseness of brake assembly bolt
	Abnormal noise is caused by slight axial movement of brake caliper on bumpy road	Check guide pin and spring plate
	Steering/suspension part becomes loose or shock absorber is worn	Check in accordance with Repair Manual
Wheel dragging	Residual pressure in brake system	Loosen bleeder screw and discharge residual pressure
	Bearing is damaged	Check bearing
	Large sliding resistance of brake caliper	Check sliding of brake caliper
	Guide pin is deformed	Check deformation of guide pin
	Guide pin is not installed in place	Check if guide pin is installed in place
	Guide pin dust boot is damaged	Check if guide pin dust boot is damaged
	Linings are not installed correctly	Check if tab of linings are installed in place
	Drive shaft	Check in accordance with Repair Manual
	Chassis interference part	Check in accordance with Repair Manual
Brake noise	Metal scratching occurs during braking	Check for interferences and alarms
	Continuous "squeak" sound occurs for a longer time during braking	Check inside and outside linings for metal particles
	A clear "click" sound occurs at the beginning of braking	Check linings for looseness
	Relevant bolts are loose	Check in accordance with Repair Manual
	Relevant parts are damaged	Check in accordance with Repair Manual

WWW.DIGITALKHODRO.COM 021 62 99 92 92

WWW.DIGITALKHODRO.COM 021 62 99 92 92

On-vehicle Inspection

Operation Step

Warning/Caution/Hint

Caution:

- Use well-sealed brake fluid DOT4 or equivalent. DO NOT use oily solution, otherwise brake system seal may be damaged.
- Brake fluid may damage paint surface. If brake fluid spills on paint surface, wash it off immediately with water.
- DO NOT use gasoline, kerosene, alcohol, engine oil, transmission oil or any other fluid that contains mineral oil to clean the system components. These kinds of fluid will damage the rubber cover and seal.
- During servicing, be sure to clean the grease or other foreign matter on the outer surface of brake caliper assembly, brake lining, brake disc and wheel hub.
- When operating brake disc and brake caliper, be careful not to damage brake disc and brake caliper and scratch or cut brake shoe linings.

1. Check conditions of tires and wheels. Damaged or worn wheels and tires can cause a pull, shudder, vibration and a condition similar to sudden braking.
2. If noise occurs while braking, check suspension components. Bounce the vehicle up and down several times and check suspension or steering components for any looseness, wear or damage.
3. Check brake fluid level and condition.
   (a) If brake fluid level is low, check ABS control unit assembly, brake caliper, brake line, brake master cylinder assembly and brake fluid reservoir, etc. for leakage.
   (b) If brake fluid is contaminated, drain a certain amount of fluid for inspection. Replace with new fluid as necessary.

شرکت دیجیتال خودرو سامانه (مسئولیت محدود)
اولین سامانه دیجیتال تعمیرکاران خودرو در ایران

WWW.DIGITALKHODRO.COM 021 62 99 92 92

WWW.DIGITALKHODRO.COM 021 62 99 92 92

ON-VEHICLE SERVICE

Brake Bleeding

Operation Step

Be sure to perform brake bleeding and clutch bleeding after replacing hydraulic parts related to brake and clutch.
For details about clutch bleeding
There are 2 methods for brake bleeding, and specific operation procedures are as follows:
Method 1: Manual bleeding brake

Caution:

- When bleeding brake system, wear safety glasses.
- Be careful when bleeding air, as brake fluid at high pressure may spray out from bleeder screw.

Warning:

- Before removing brake fluid reservoir, wipe off any dust and other foreign matters on brake fluid reservoir to prevent them from entering.
- Use fresh, clear and well-sealed brake fluid with specified type or equivalent.
- DO NOT allow the brake fluid to adhere to any paint surface, such as vehicle body. If brake fluid leaks onto any paint surface, immediately wash it off.
- During bleeding, do not depress brake pedal repeatedly at any time with bleeder screw opened. Otherwise, air amount in the system will increase to make an extra bleeding.
- DO NOT drain the brake fluid in brake fluid reservoir while bleeding brake system.

Hint:

- An assistant will be required to assist when bleeding brake system.

1. Fill brake fluid reservoir with brake fluid to a proper level.
2. Loosen bleeder screw cap and connect a clear plastic hose to bleeder screw. Submerge the end of hose into container.
3. Have an assistant depress brake pedal 3 to 4 times repeatedly; and depress and hold it at a lower position, then loosen the bleeder screw.

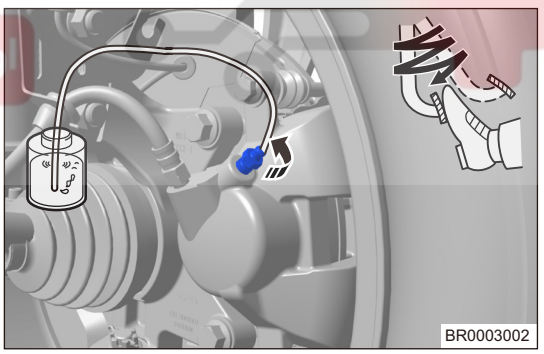

4. Tighten bleeder screw every time brake pedal goes down quickly, then release the brake pedal.

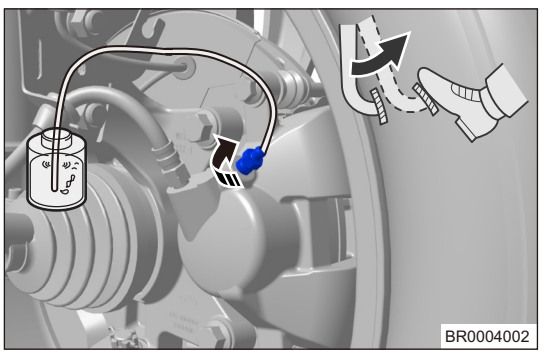

WWW.DIGITALKHODRO.COM 021 62 99 92 92

WWW.DIGITALKHODRO.COM 021 62 99 92 92

5. Repeat above steps, and use the same procedures to bleed brake line of each wheel in order of rear left wheel, front left wheel, front right wheel and rear right wheel, until no air exists in brake system.

   Empty sign: A stream of fresh brake fluid flows into clear container without bubbles.

   Hint:
   - During bleeding of brake system, make sure brake fluid level in brake fluid reservoir is always near "MAX" mark. Check brake fluid level at all times during bleeding. Add brake fluid as necessary.

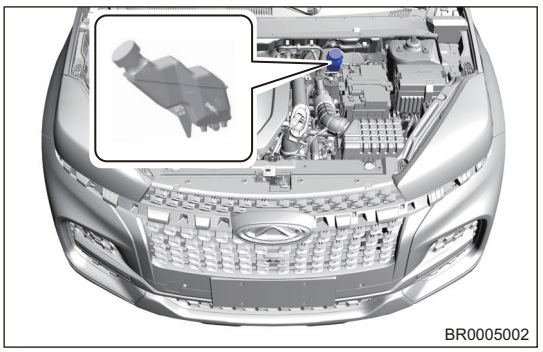
BR0005002

6. Check and adjust the brake fluid level to "MAX" mark.
7. Check the brake pedal braking effect. If braking effect is poor or pedal is spongy, air may still exist in system. Perform bleeding procedures for brake system again as necessary.
8. Test vehicle to confirm that brakes operate properly with good depressing feel.

Method 2: Bleeding brake using diagnostic tester

Warning:
- Check that battery voltage should not be lower than 12 V.
- Bleeding order must be rear left/front left/front right/rear right.
- If it is necessary to repeat part or whole bleeding procedure, be sure to wait for 5 minutes to cool solenoid valve down, otherwise solenoid valve may be damaged due to overheat.
- Depress brake pedal repeatedly with a frequency of 0.5 times per second in the whole bleeding process.

To reach sufficient pressure in hydraulic regulator, brake pedal needs to be depressed repeatedly during whole process.

9. Fill brake fluid reservoir with brake fluid to a proper level.
10. Depress brake pedal more than 20 times with engine stopped.
11. Turn ENGINE START STOP switch to ON, and enter T18 "Anti-lock Brake System/Electronic Stability Program" system using diagnostic tester.

    (a) Please select [ABS] on Diagnostic program screen.

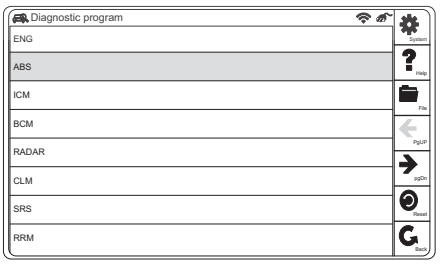

BR0005102

    (b) Please select [Special function] on Diagnostic program screen.

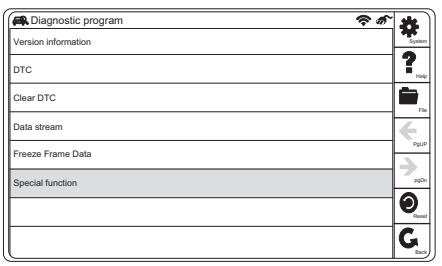

BR0005202

WWW.DIGITALKHODRO.COM 021 62 99 92 92

WWW.DIGITALKHODRO.COM 021 62 99 92 92

(c) Please select [Repair Bleed] on Special function screen.

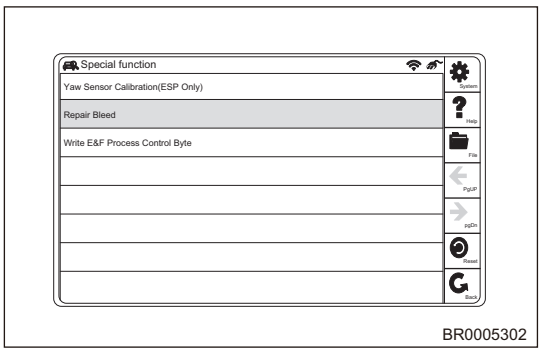

(d) Please select [Phase 1: Bleed the wheel rear left] on Repair Bleed screen, then perform bleeding operation for rear left wheel.

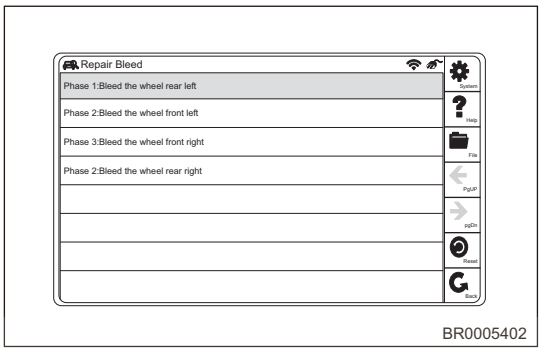

12. Loosen bleeder screw cap of rear left wheel and connect a clear plastic hose to bleeder screw. Submerge the end of hose into container.

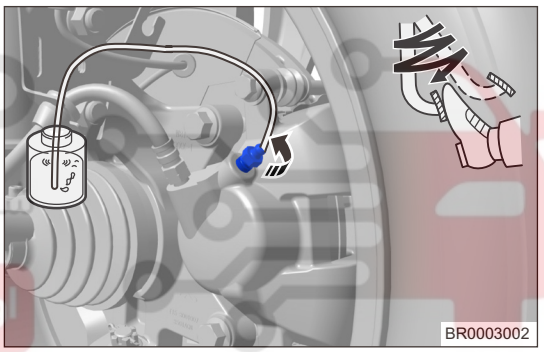

شرکت دیجیتال خودرو سامانه (مسئولیت محدود)
اولین سامانه دیجیتال تعمیرکاران خودرو در ایران

13. Use same bleeding procedures as rear left wheel to bleed air for brake lines of rear left wheel, front left wheel, front right wheel and rear right wheel, until no air exists in brake system.

Empty sign: A stream of fresh brake fluid flows into clear container without bubbles.

Hint:

- During bleeding of brake system, make sure brake fluid level in brake fluid reservoir is always near "MAX" mark. Check brake fluid level at all times during bleeding. Add brake fluid as necessary.

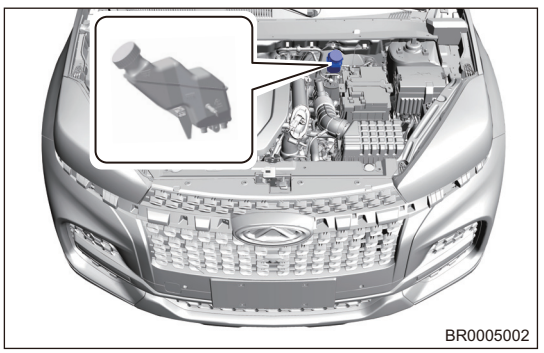

14. Check and adjust the brake fluid level to "MAX" mark.
15. Check the brake pedal effect. If braking effect is poor or pedal is spongy, air may still exist in system. Perform bleeding procedures for brake system again as necessary.
16. Test vehicle to confirm that brakes operate properly with good depressing feel.

WWW.DIGITALKHODRO.COM 021 62 99 92 92

WWW.DIGITALKHODRO.COM 021 62 99 92 92

Brake Fluid Replacement

Operation Step

1. Drain the brake fluid.
   (a) Start engine and run it at idle.
   (b) Screw off filler cap of brake fluid reservoir assembly. Loosen bleeder screw cap and connect a clear plastic hose to bleeder screw. Submerge the end of hose into container.
   (c) Loosen bleeder screw, and depress brake pedal continuously until no brake fluid comes out.

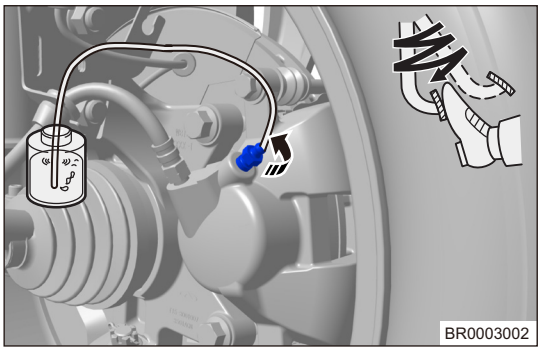

2. Add brake fluid.
   (a) Tighten bleeder screw after confirming that brake fluid has been drained. Fill brake fluid reservoir with new brake fluid to a proper level.
3. Perform bleeding procedures.
   (a) After replacing with new brake fluid, be sure to bleed the brake system for normal operation. For details of brake system bleeding (See page 22-9).

شرکت دیجیتال خودرو سامانه (مسئولیت محدود)
اولین سامانه دیجیتال تعمیرکاران خودرو در ایران

WWW.DIGITALKHODRO.COM 021 62 99 92 92

WWW.DIGITALKHODRO.COM 021 62 99 92 92

Brake Fluid Reservoir Assembly

On-vehicle Inspection

1. Check the brake fluid level warning switch.
   (a) Remove the brake fluid reservoir filler cap.
   (b) Disconnect the brake fluid level warning switch wire harness connector.
   (c) Using ohm band of digital multimeter, check for continuity between brake fluid level warning switch terminals according to conditions shown in table below.

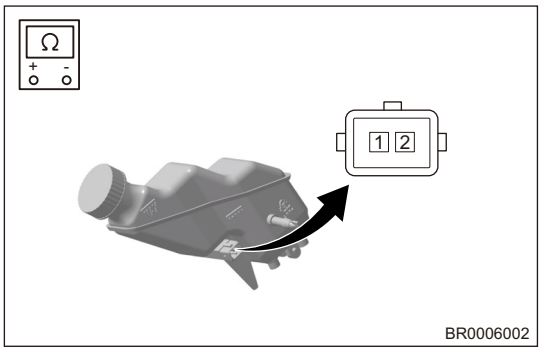

Multimeter Connection	Condition	Specified Condition
Terminal 1 - Terminal 2	Float upward (switch ON)	∞
Terminal 1 - Terminal 2	Float downward (switch OFF)	≤ 1 Ω

Hint:
- There is a float in fluid reservoir. Position of float changes as brake fluid level rises or drops.
- If result is not as specified, replace brake fluid reservoir assembly.

   (d) Unplug fluid level sensor connector when warning light comes on. If warning light remains on, check wire harness and instrument cluster. If instrument cluster warning indicator goes off immediately, the fluid level sensor is malfunctioning. (Precondition: Brake fluid is within scale range)
   (e) Add brake fluid to MAX mark.

شرکت دیجیتال خودرو سامانه (مسئولیت محدود)
اولین سامانه دیجیتال تعمیرکاران خودرو ایران

Removal

1. Drain the brake fluid (See page 22-9).

Hint:
- Drained brake fluid should be well kept in a container. Never discard it at will.

Caution:
- Wash off brake fluid immediately if it comes in contact with any paint surface.

2. Remove the brake fluid reservoir assembly.
   (a) Disconnect the brake fluid level warning switch connector (arrow).

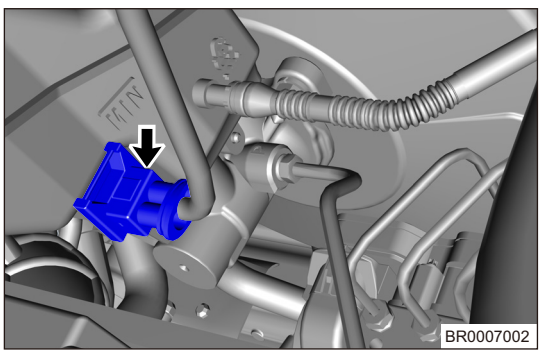

WWW.DIGITALKHODRO.COM 021 62 99 92 92

WWW.DIGITALKHODRO.COM 021 62 99 92 92

(b) Disconnect clutch hose from brake fluid reservoir assembly (for MT models).

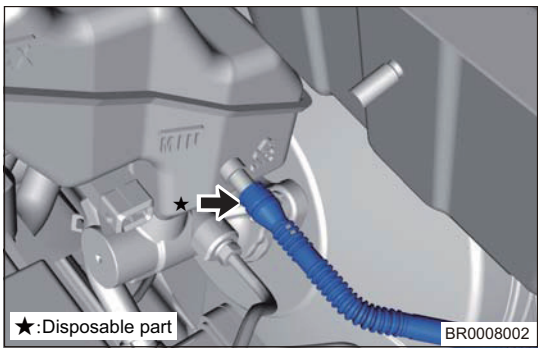

(c) Remove fixing screw (arrow) between brake fluid reservoir assembly and brake master cylinder assembly.

Tightening torque
5 ± 1 N·m

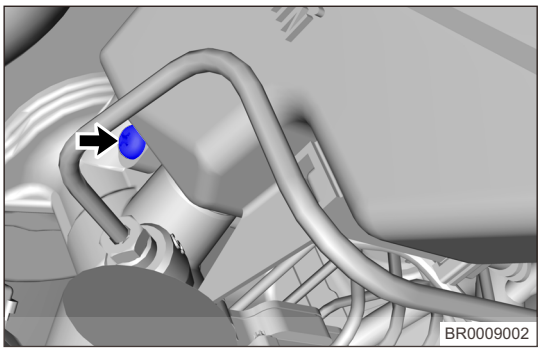

(d) Remove brake fluid reservoir assembly from brake master cylinder assembly.

Installation

1. Installation is in the reverse order of removal.

Hint:
Perform bleeding procedures for brake system and add brake fluid to a proper level after completing installation.

Caution:
- Clutch hose only can be used once, and cannot be used repeatedly after removal and installation.
- After hose is bent, it is normal that some material between two corrugations is "whitish".

WWW.DIGITALKHODRO.COM 021 62 99 92 92

WWW.DIGITALKHODRO.COM 021 62 99 92 92

Brake Master Cylinder Assembly

Removal

Warning/Caution/Hint

Warning:

- To prevent brake master cylinder assembly damage and other dirt from being attracted by booster, remove vacuum from vacuum booster before removing brake master cylinder assembly.
- Remove vacuum by depressing brake pedal repeatedly without engine running, until brake pedal is depressed firmly.
- After removing brake line, sealing measure should be taken to prevent foreign matter form entering.

1. Drain the brake fluid (See page 22-9).

   Hint:
   - Drained brake fluid should be well kept in a container. Never discard it at will.

   Caution:
   - Wash off brake fluid immediately if it comes in contact with any paint surface.
2. Remove the air filter with intake hose.
3. Remove the brake fluid reservoir assembly (See page 22-13).
4. Remove the brake master cylinder assembly (See page 22-9).

   (a) Loosen 2 fixing plugs (arrow) between brake master cylinder assembly and brake pipe.

   Tightening torque
   18 ± 2 N·m

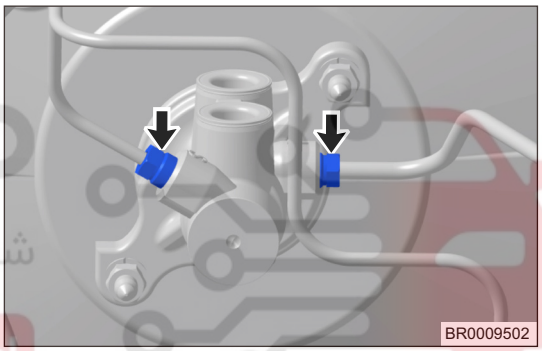

   (b) Loosen 2 fixing nuts and washers (arrow) between brake master cylinder assembly and vacuum booster.

   Tightening torque
   13.7 - 21.6 N·m

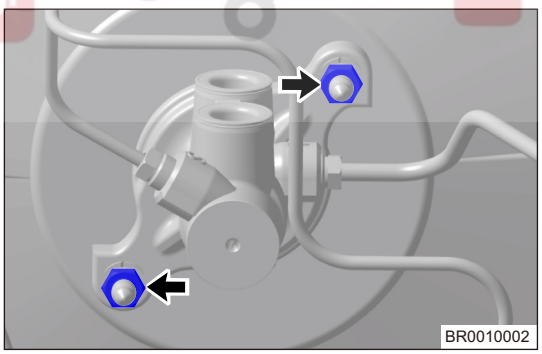

   (c) Carefully slide brake master cylinder assembly vertically out of vacuum booster.

   Caution:
   - The design of brake master cylinder assembly and piston makes piston fall out easily. To prevent the occurrence of this case, make sure the master cylinder is level or end surface faces downward (piston surface facing upward) when operating brake master cylinder assembly, to prevent master cylinder piston from dropping.
   - Make sure that no foreign matter adheres to brake master cylinder assembly piston. If foreign matter adheres, clean it off with a piece of clean cloth. Then, apply grease to entire outer edge contact surface of the master cylinder piston.
   - Master cylinder should be handled carefully. Avoid any impact to master cylinder, such as dropping. It cannot be reused if dropped.
   - DO NOT tap or pinch the master cylinder piston, and avoid damaging the master cylinder piston in any other ways.

WWW.DIGITALKHODRO.COM 021 62 99 92 92

WWW.DIGITALKHODRO.COM 021 62 99 92 92

Installation

1. Installation is in the reverse order of removal.

   Caution:
   - Be sure to tighten fixing bolt and nut to specified torque during installation.
   - Perform bleeding procedures for brake system and add brake fluid to a proper level after completing installation.
   - Check if distance between brake master cylinder and brake pedal is within normal range after installation.
     Specified distance: 125 mm

دیجیتال خودرو
شرکت دیجیتال خودرو سامانه (مسئولیت محدود)
اولین سامانه دیجیتال تعمیرکاران خودرو در ایران

WWW.DIGITALKHODRO.COM 021 62 99 92 92

WWW.DIGITALKHODRO.COM 021 62 99 92 92

Vacuum Booster with Brake Master Cylinder Assembly

On-vehicle Inspection

1. Check the vacuum booster assembly.
   (a) Check air tightness:
   - Start engine and stop it after 1 or 2 minutes, then disconnect negative battery cable. Slowly depress the brake pedal several times.
   - Make sure that booster is airtight. Check that every pedal depression amount becomes less than the previous one. If pedal operation is not as specified, check the check valve. If check valve is normal, replace the vacuum booster assembly.
   - Start the engine. Depress and hold pedal, and then stop engine.
   - Make sure that booster is airtight. Depress and hold pedal for 30 seconds, and check that pedal reserve distance does not change.

   (b) Check operation.
   - Stop engine and disconnect negative battery cable.
   - Depress the pedal several times and check that pedal reserve distance does not change.

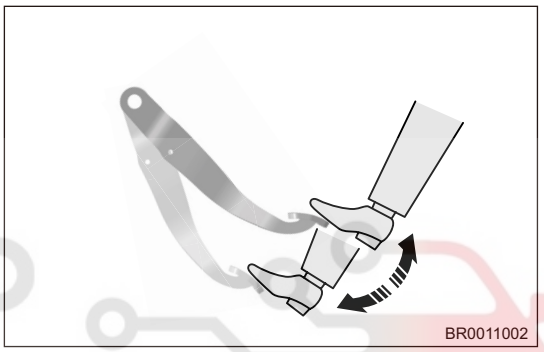

   - Depress and hold the pedal, and then start engine. Check that the pedal can only be depressed slightly.

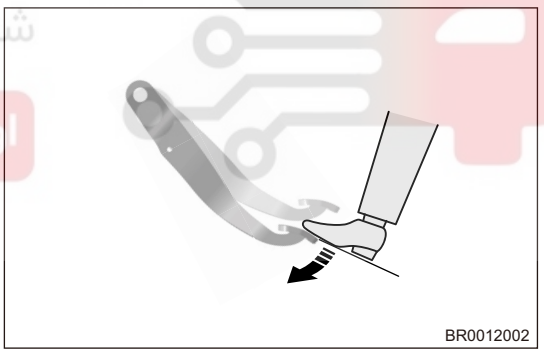

   - If pedal operation is not as specified, check the check valve. If check valve is normal, replace the vacuum booster assembly.

دیجیتال خودرو
شرکت دیجیتال خودرو (سهامی خاص) (با مسئولیت محدود)
اولین سامانه دیجیتال تعمیرکاران خودرو در ایران

WWW.DIGITALKHODRO.COM 021 62 99 92 92

WWW.DIGITALKHODRO.COM 021 62 99 92 92

Removal

1. Drain the brake fluid (See page 22-9).

   Hint:
   - Drained brake fluid should be well kept in a container. Never discard it at will.

   Caution:
   - Wash off brake fluid immediately if it comes in contact with any paint surface.
2. Disconnect the negative battery cable.
3. Remove the brake fluid reservoir assembly (See page 22-9).
4. Remove the vacuum booster with brake master cylinder assembly.

   (a) Loosen 2 fixing plugs (arrow) between brake master cylinder assembly and brake pipe.

   Tightening torque
   18 ± 2 N·m

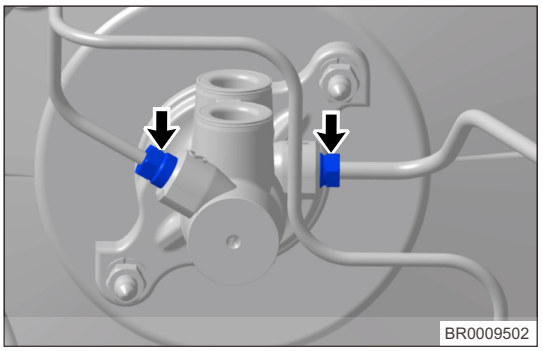

   (b) Detach vacuum tube assembly with check valve (arrow) from vacuum booster assembly.

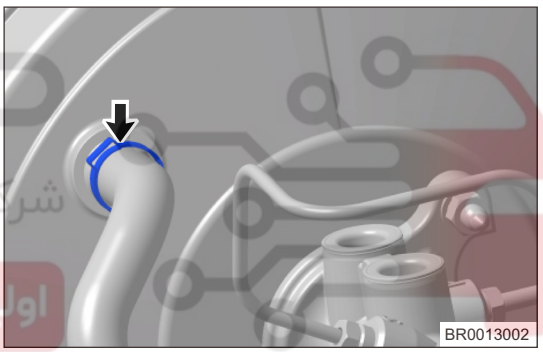

   (c) Remove locking pin (2) and push rod pin (1) from vacuum booster push rod and disengage brake pedal assembly.

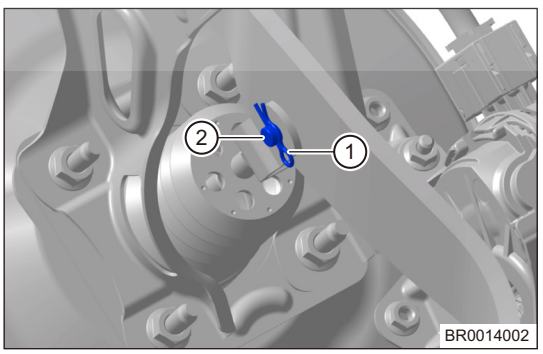

   (d) Remove 4 fixing nuts (arrow) between vacuum booster assembly and brake pedal assembly.

   Tightening torque
   23 ± 2 N·m

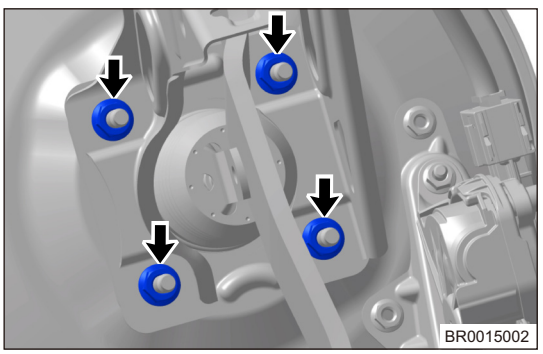

   (e) Move away the brake pedal.

شرکت دیجیتال خودرو سامانه (مسئولیت محدود)
اولین سامانه دیجیتال تعمیرکاران خودرو در ایران

WWW.DIGITALKHODRO.COM 021 62 99 92 92

WWW.DIGITALKHODRO.COM 021 62 99 92 92

(f) Remove vacuum booster with brake master cylinder assembly from engine compartment.

Inspection

1. Check the check valve.
   (a) Remove check valve from vacuum tube assembly.
   (b) Check that there is airflow (A) from vacuum booster to engine, and no airflow (B) from engine to vacuum booster.
   If result is not as specified, replace vacuum tube assembly.

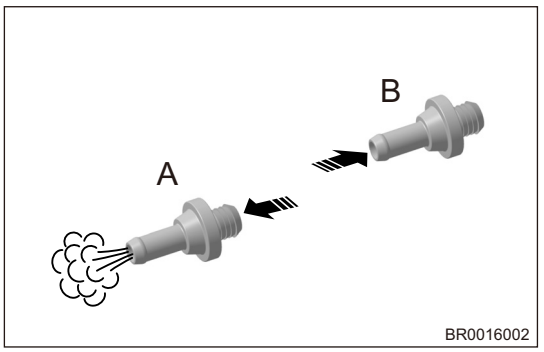

Installation

1. Installation is in the reverse order of removal.
   Caution:
   - Be sure to tighten fixing bolt and nut to specified torque during installation.
   - Perform bleeding procedures for brake system and add brake fluid to a proper level after completing installation.
   - It is necessary to check or adjust brake switch assembly after removing vacuum booster with brake master cylinder assembly (Refer to installation of brake switch assembly).

شرکت دیجیتال خودرو سامانه (مسئولیت محدود)
اولین سامانه دیجیتال تعمیرکاران خودرو در ایران

WWW.DIGITALKHODRO.COM 021 62 99 92 92

WWW.DIGITALKHODRO.COM 021 62 99 92 92

Brake Pedal Assembly

Removal

1. Remove the brake light switch assembly.

   (a) Disconnect brake light switch assembly wire harness connector (1) and brake pedal fixing clip (2).

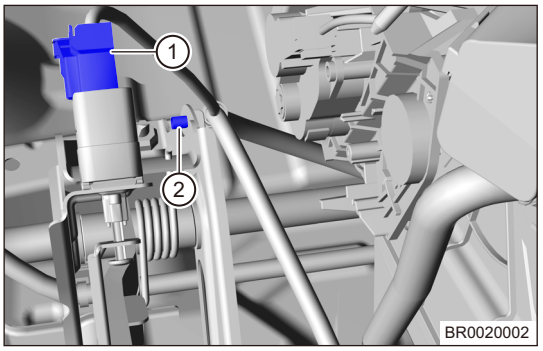

   (b) Press switch by hand and turn it counterclockwise, align the switch body with lengthwise direction of pedal installation hole, and pull out brake switch assembly along opening of pedal, then remove brake switch assembly.

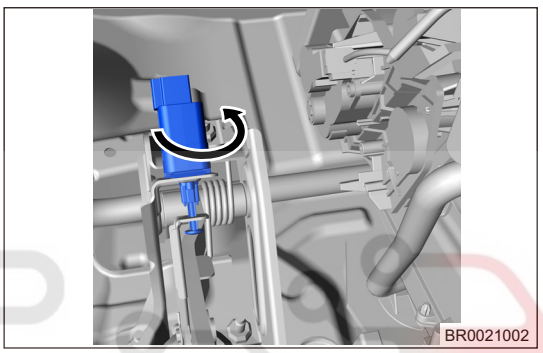

دیجیتال خودرو
شرکت دیجیتال خودرو سامانه (مسئولیت محدود)
اولین سامانه دیجیتال تعمیرکاران خودرو در ایران

2. Remove the brake pedal assembly.

   (a) Remove locking pin (2) and push rod pin (1) from vacuum booster push rod and disengage brake pedal assembly.

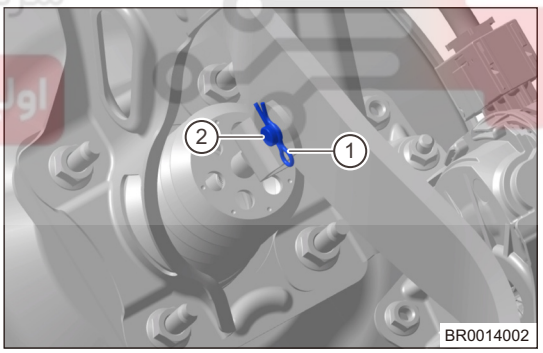

   (b) Remove 4 fixing nuts (arrow) between vacuum booster assembly and brake pedal assembly.

   Tightening torque
   23 ± 2 N·m

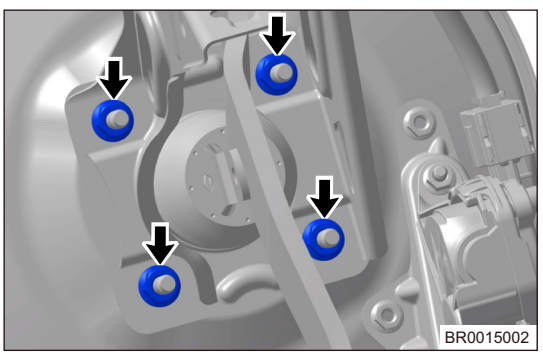

WWW.DIGITALKHODRO.COM 021 62 99 92 92

WWW.DIGITALKHODRO.COM 021 62 99 92 92

(c) Remove fixing nut (arrow) between brake pedal assembly and body.

Tightening torque
23 ± 2 N·m

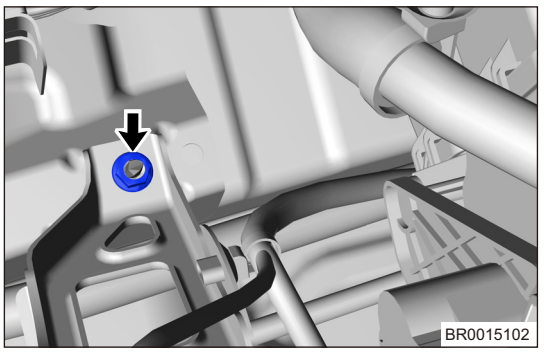

(d) Remove brake pedal assembly from cabin.

Inspection

1. Check the brake light switch assembly.

(a) Using ohm band of digital multimeter, check for continuity between brake light switch assembly terminals according to table below.

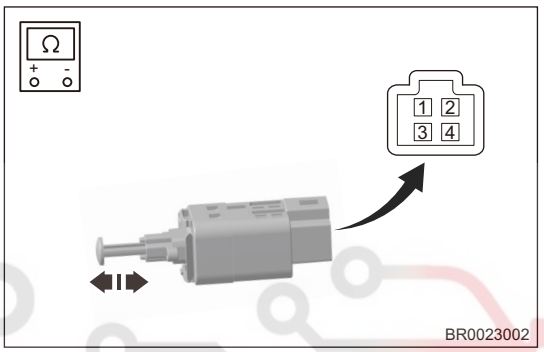

Multimeter Connection	Switch Condition	Specified Condition
Terminal 1 - Terminal 3	Brake pedal depressed (switch pin released)	≤ 1 Ω
Terminal 2 - Terminal 4	Brake pedal depressed (switch pin released)	∞
Terminal 1 - Terminal 3	Brake pedal released (switch pin pushed)	∞
Terminal 2 - Terminal 4	Brake pedal released (switch pin pushed)	≤ 1 Ω

Hint:
- If result is not as specified, replace brake light switch assembly.

دیجیتال خودرو
شرکت دیجیتال خودرو سامانه (مسئولیت محدود)
اولین سامانه دیجیتال تعمیر خودرو در ایران

Installation

1. Install the brake pedal assembly. (Installation is in the reverse order of removal)
2. Install the brake switch assembly.

(a) Before assembling brake switch to vehicle, the lever must be pulled out completely. If the switch lever cannot be pulled out in the direction of axis, the lever has been pulled to the longest.

(b) Depress brake pedal fully, align brake switch body with mounting hole of pedal and insert it into mounting hole, press switch and turn it clockwise to clamp switch clip into clip hole of pedal (before assembly, brake pedal has been installed to brake master cylinder).

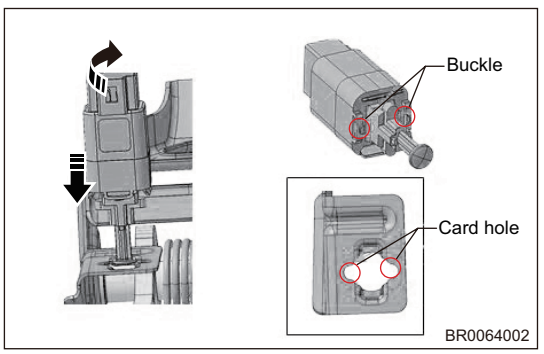

(c) Release brake pedal slowly to return brake pedal to initial position automatically under the action of return spring, and automatically adjust brake switch lever to appropriate gear position simultaneously.

WWW.DIGITALKHODRO.COM 021 62 99 92 92

WWW.DIGITALKHODRO.COM 021 62 99 92 92

(d) Connect the back light switch assembly wire harness connector (arrow).

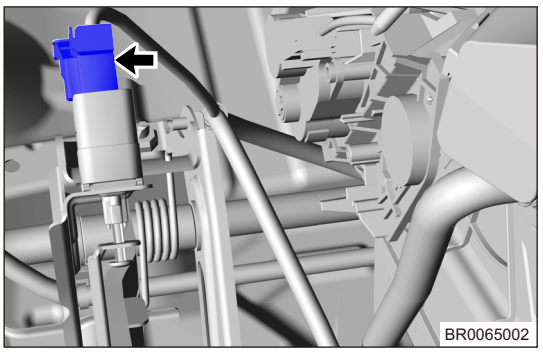

(e) Installation is finished.

Caution:

- After completing installation, brake pedal should fully contact with brake switch lever (lever is compressed).
- After brake pedal is fully depressed, the hand should not release pedal during auto return of pedal and make pedal return to original position slowly. Avoid releasing pedal suddenly, large impact may lead brake switch to jump.
- Be sure to tighten fixing nuts to specified torques during installation.
- Check that brake light operates normally after installation.
- Check if brake pedal travel is within normal range after installing brake pedal.
  Normal range: ≥ 120 mm

دیجیتال خودرو
شرکت دیجیتال خودرو سامانه (مسئولیت محدود)
اولین سامانه دیجیتال تعمیرکاران خودرو در ایران

WWW.DIGITALKHODRO.COM 021 62 99 92 92

WWW.DIGITALKHODRO.COM 021 62 99 92 92

Front Disc Brake Assembly

Description

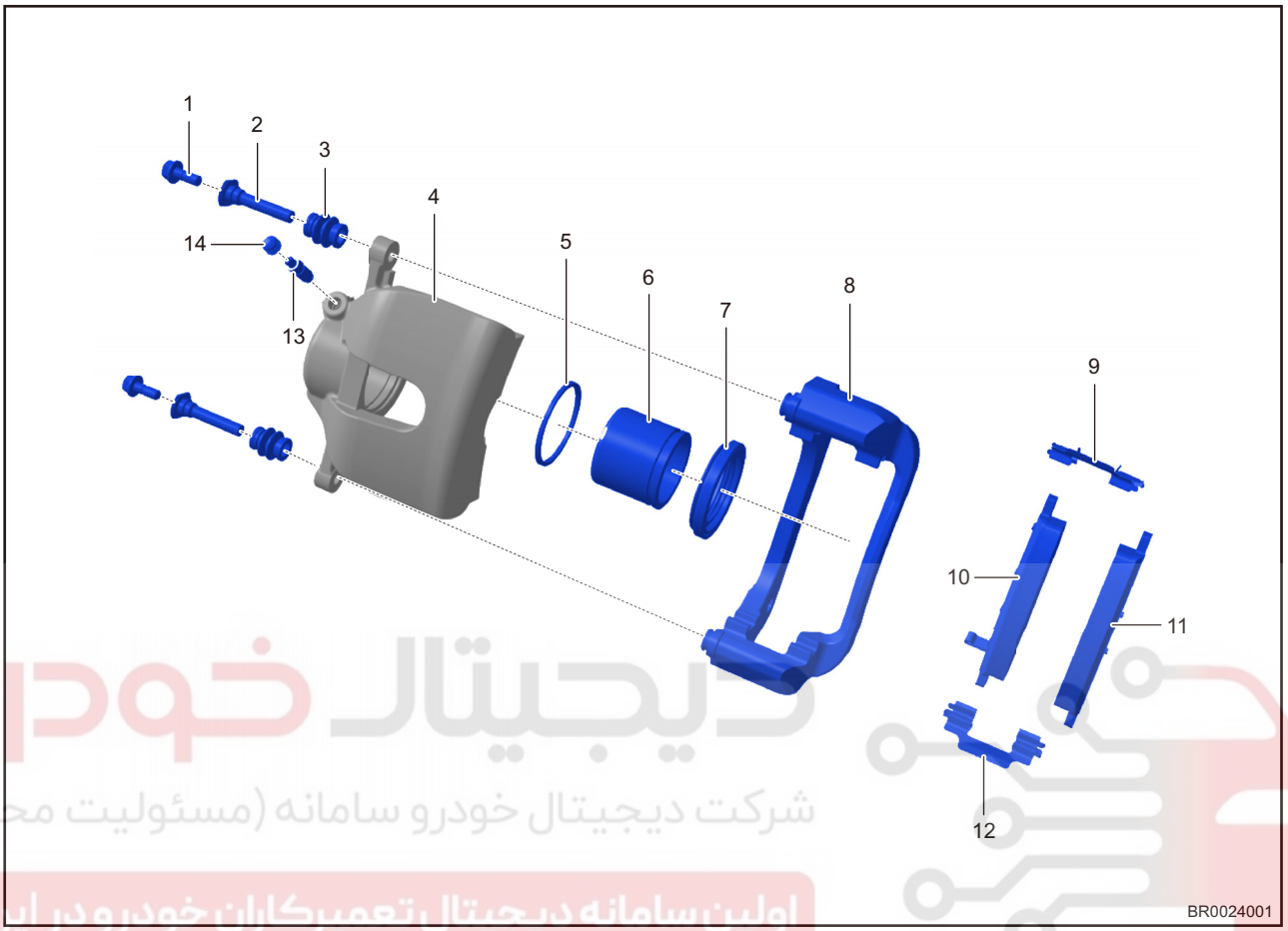

1 - Brake Caliper Guide Bolt	2 - Brake Caliper Guide Bolt Guide Pin
3 - Brake Caliper Guide Pin Rubber Dust Boot	4 - Front Disc Brake Cylinder
5 - Front Disc Brake Piston Seal Ring	6 - Front Disc Brake Piston
7 - Front Disc Brake Piston Dust Boot	8 - Front Disc Brake Caliper Fixing Bracket
9 - Upper Support Shim	10 - Inner Brake Lining
11 - Outer Brake Lining	12 - Lower Support Shim
13 - Bleeder Screw	14 - Bleeder Screw Cap

On-vehicle Inspection

1. Check the brake disc runout.
   (a) Remove the front wheel (See page 20-8).
   (b) Fix dial indicator (1) to a proper position, then set its pointer to a position about 10 mm from out edge of brake disc.

WWW.DIGITALKHODRO.COM 021 62 99 92 92

WWW.DIGITALKHODRO.COM 021 62 99 92 92

(c) Turn brake disc (2) slowly and check its runout, mark the lowest and highest points and record these measured value.

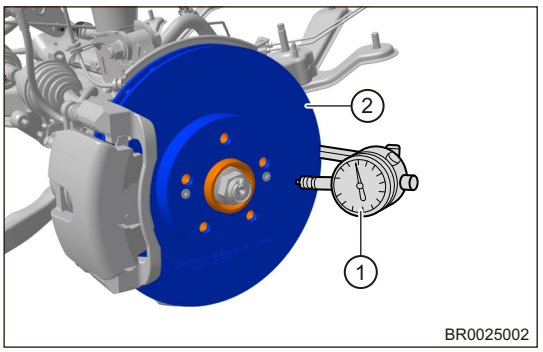

(d) Check the runout on the other side of brake disc in the same manner, mark the lowest and highest points and record these measured value.
(e) Compare recorded runout value with limit value.
Front brake disc runout: Less than 0.06 mm
(f) If runout exceeds the maximum value, replace brake disc.

Removal

Warning/Caution/Hint
Hint:
- Use same procedures for right and left sides.
- Procedures listed below are for left side.

1. Remove the front left wheel (See page 20-8).
2. Remove the front left brake caliper assembly.
   (a) Remove 2 coupling bolts (1) between front left brake caliper assembly and front left steering knuckle.
   Tightening torque
   90 ~ 110 N·m
   (b) Remove coupling plug (arrow) between front left brake caliper assembly and front left brake hose assembly.
   Tightening torque
   20 ± 2 N·m
   Caution:
   - DO NOT allow brake fluid to be sprayed on your clothes or skin when removing brake hose, as brake fluid is corrosive.

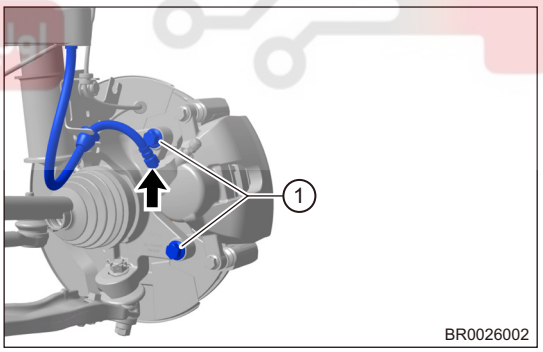

   (c) Remove the front left brake caliper assembly.
3. Remove the front left brake disc.
   (a) Remove 2 locating screws (arrow) and front left brake disc.
   Tightening torque
   4.5 ± 0.5 N·m

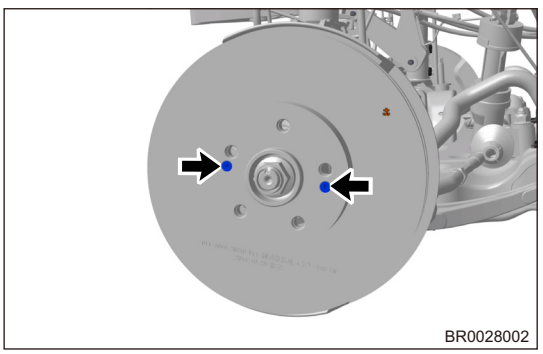

WWW.DIGITALKHODRO.COM 021 62 99 92 92

WWW.DIGITALKHODRO.COM 021 62 99 92 92

Disassembly

Warning/Caution/Hint

Hint:

- Use same procedures for right and left sides.
- Procedures listed below are for left side.

1. Remove the bleeder screw (with bleeder screw cap).
   (a) Remove bleeder screw (with bleeder screw cap) (arrow) from brake caliper assembly.

   Tightening torque
   9 ~ 11 N·m

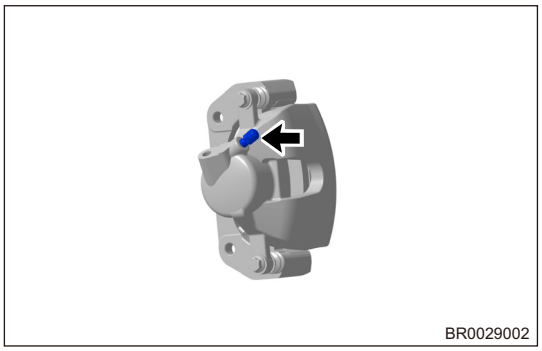
BR0029002

2. Remove the brake cylinder assembly.
   (a) Remove 2 guide bolts (arrow) between brake caliper fixing bracket and brake cylinder assembly.

   Tightening torque
   22 ~ 32 N·m

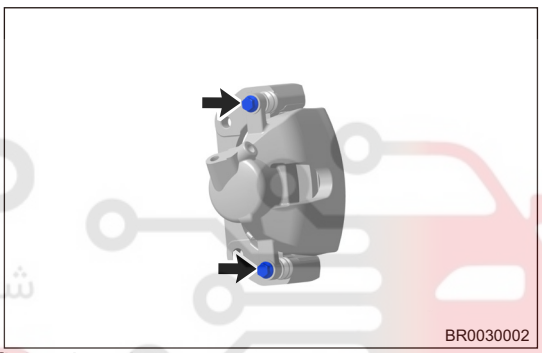
BR0030002

   (b) Separate brake cylinder assembly from brake caliper fixing bracket.
3. Remove the front brake caliper guide bolt guide pin (with dust boot).
   (a) Remove 2 brake caliper guide bolt guide pins (with dust boot) (arrow) from brake caliper fixing bracket.

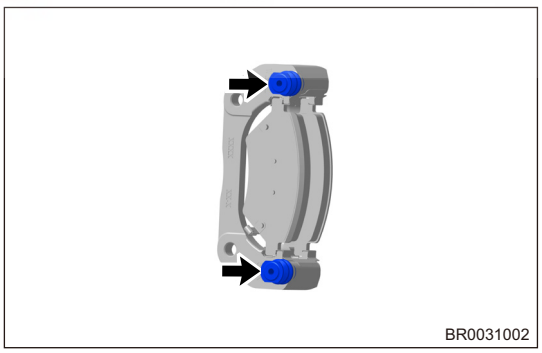
BR0031002

4. Remove the front brake lining.
   (a) Remove inner brake lining and outer brake lining (arrow) from brake caliper fixing bracket.

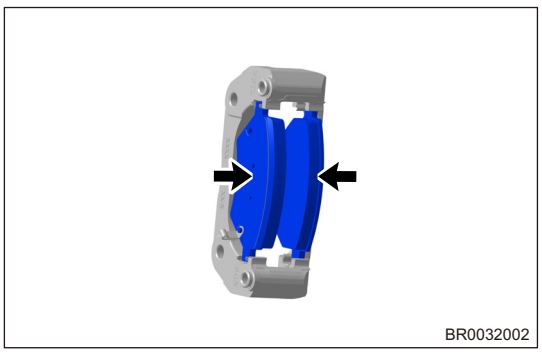
BR0032002

WWW.DIGITALKHODRO.COM 021 62 99 92 92

WWW.DIGITALKHODRO.COM 021 62 99 92 92

5. Remove the brake lining support shim.
   (a) Remove 2 brake lining support shims (arrow) from brake caliper fixing bracket.

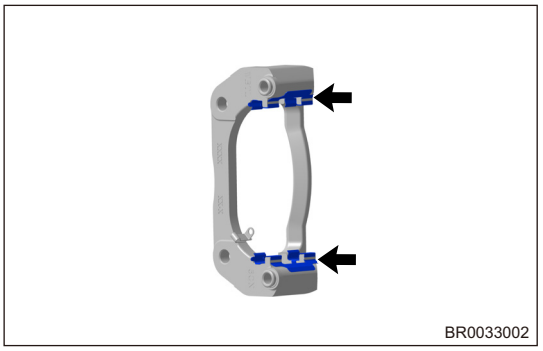

Inspection

1. Check brake caliper fixing bracket and brake caliper guide pin set.
   (a) Clean the contact surfaces of brake caliper fixing bracket and brake lining support shims with brake cleaner. Check for deformation, cracks, rust and foreign matter which is difficult to remove.
   (b) Check brake caliper guide pin rubber dust boot for deformation, cracks, wear and foreign matter which is difficult to remove.
   (c) Install the brake caliper guide pin and its rubber dust boot to brake caliper fixing bracket. Brake caliper guide pin set should move smoothly without sticking when pushing it with hand; otherwise replace it.
   (d) After installing the brake lining, check if it is easy to drop (due to insufficient elasticity of support shim). Replace as necessary.
2. Check the brake lining.
   (a) Visually check the brake lining for flatness, and also check for excessive wear. If the condition of lining cannot be confirmed accurately only by visual inspection, perform physical inspection as necessary.
   (b) Measure the minimum brake lining thickness. When the minimum thickness of brake lining is 2 mm or less, replace the brake linings.

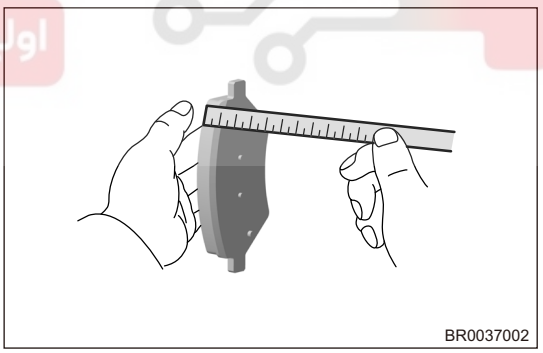

   (c) When replacing the excessively worn brake linings (inner and outer), it is also necessary to replace the linings on opposite side of vehicle as well as unchecked linings to maintain proper braking performance. If it is unnecessary to replace brake linings, be sure to reinstall brake linings to original positions.

3. Check the brake disc.
   (a) Minor scratch or wear on brake disc surface is acceptable. If severe scratch or deformation exists, the brake disc must be replaced.
   (b) Excessive wear of brake disc may cause poor contact between brake lining and surface of brake disc. If protrusion on the disc is not removed before installing new brake lining, it will cause abnormal wear of brake disc.
   (c) It is normal that the surface of brake disc is worn when replacing brake lining. If cracks or burned spots exist, the brake disc must be replaced.

WWW.DIGITALKHODRO.COM 021 62 99 92 92

WWW.DIGITALKHODRO.COM 021 62 99 92 92

4. Check the brake disc thickness.

(a) Using a vernier caliper, measure brake disc thickness at center of brake lining contact surface as shown in illustration.
Standard thickness: 25 mm
Minimum thickness: 23 mm

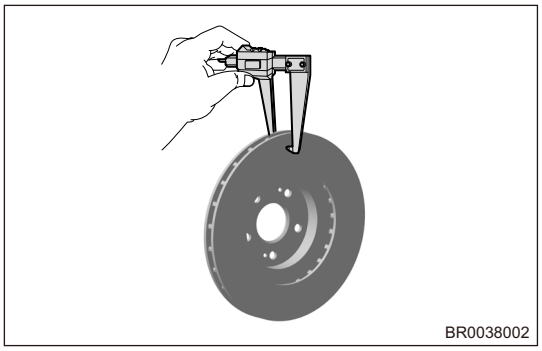
BR0038002

(b) If it is less than the minimum thickness due to wear, replace brake disc.
Caution:
- DO NOT machine the brake disc, because it may make brake disc thickness less than the minimum thickness.

Assembly

Warning/Caution/Hint
- Use same procedures for right and left sides.
- Procedures listed below are for left side.

Hint:
- When assembling brake caliper assembly, always keep your hands clean.
- When assembling brake caliper assembly, always use new clean brake fluid.
- Never use old front disc brake piston seal ring.

1. Install the brake lining support shim.

(a) Securely install upper and lower support shims (arrow) onto brake caliper fixing bracket.

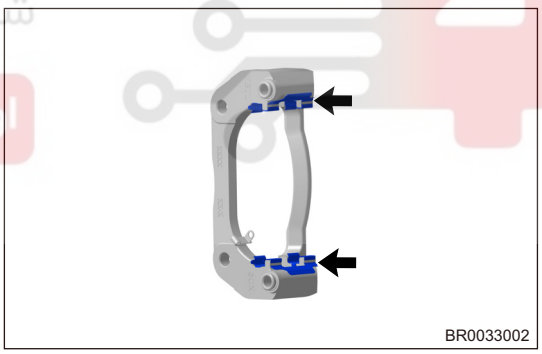
BR0033002

2. Install the front brake lining.

(a) Securely install inner brake lining and outer brake lining (arrow) onto brake caliper fixing bracket. Make sure they are clamped in place.

Caution:
- Make sure contact surface of lining and brake disc is free of oil and grease.

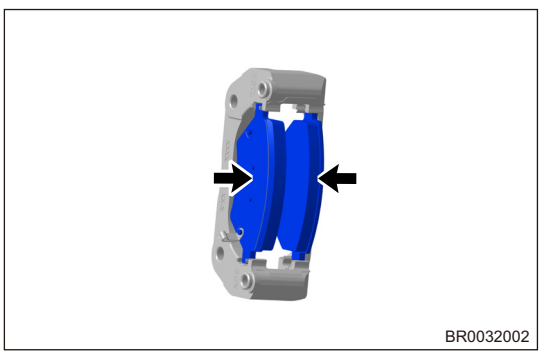
BR0032002

WWW.DIGITALKHODRO.COM 021 62 99 92 92

WWW.DIGITALKHODRO.COM 021 62 99 92 92

3. Install the front brake caliper guide bolt guide pin (with dust boot).
   (a) Apply a small amount of grease to the contact surface between guide bolt guide pin and guide pin rubber dust boot (arrow), and securely install them to brake caliper fixing bracket.

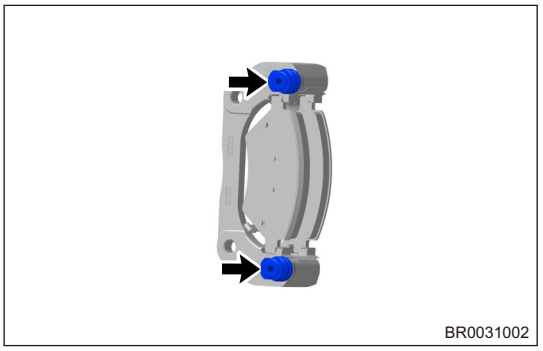
BR0031002

4. Install the brake cylinder assembly.
   (a) Using G type pliers, slightly retract brake cylinder piston.

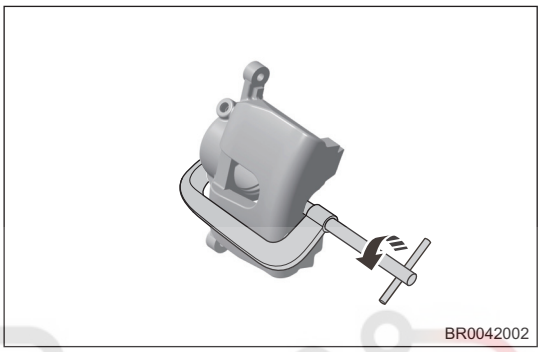
BR0042002

   (b) Align brake caliper guide bolts (arrow) with guide pin holes and securely install brake cylinder assembly.

   Tightening torque
   22 ~ 32 N·m

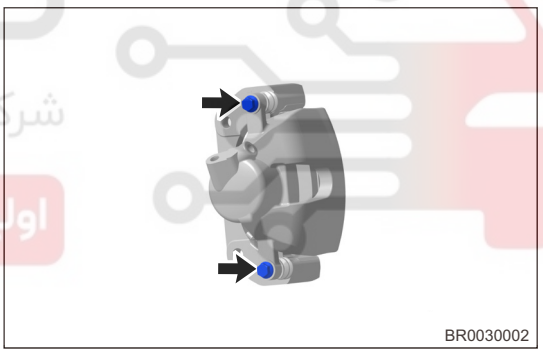
BR0030002

5. Install the bleeder screw (with bleeder screw cap).
   (a) Securely install bleeder screw (with bleeder screw cap) (arrow) to front brake caliper assembly.

   Tightening torque
   9 ~ 11 N·m

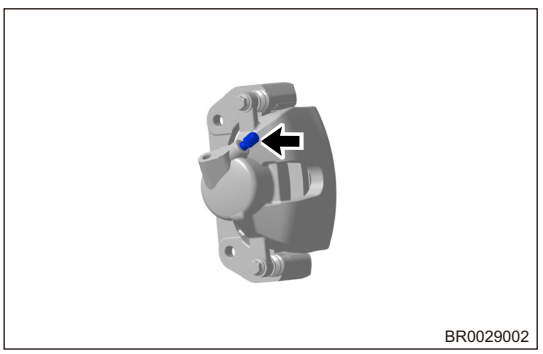
BR0029002

WWW.DIGITALKHODRO.COM 021 62 99 92 92

WWW.DIGITALKHODRO.COM 021 62 99 92 92

Installation

1. Installation is in the reverse order of removal.

   Caution:
   - Make sure contact surface of lining and brake disc is free of oil and grease.
   - Before installing brake linings, completely retract brake caliper piston back into bore of brake caliper.
   - Depress brake pedal several times to secure brake linings to brake disc in order to ensure safety after installing brake linings and before moving vehicle.
   - Replace the brake linings in pairs. DO NOT replace one alone.
   - DO NOT install inner brake lining and outer brake lining reversely.
   - Be sure to check brake system for leakage after installation. Repair or replace malfunctioning parts as necessary.
   - Be sure to perform bleeding procedures for brake system after installation.
   - Be sure to add brake fluid to a proper level after installation.

دیجیتال خودرو
شرکت دیجیتال خودرو سامانه (مسئولیت محدود)
اولین سامانه دیجیتال تعمیرکاران خودرو در ایران

WWW.DIGITALKHODRO.COM 021 62 99 92 92

WWW.DIGITALKHODRO.COM 021 62 99 92 92

Front Brake Hose Assembly

Removal

Warning/Caution/Hint

Warning:

- Be sure to wear necessary safety equipment to prevent accidents when repairing.
- Try to prevent body paint surface from being scratched during removal and installation.

Hint:

- Use same procedures for right and left sides.
- Procedures listed below are for left side.

1. Remove the front left wheel (See page 20-8).
2. Drain the brake fluid (See page 22-9).

   Hint:

   - Drained brake fluid should be well kept in a container. Never discard it at will.

   Caution:

   - Wash off brake fluid immediately if it comes in contact with any paint surface.
3. Remove the front left brake hose assembly.

   (a) Loosen coupling bolt (arrow) between front left brake hose assembly and front left brake pipe, and disengage fixing clip (1).

   Tightening torque
   18 ± 2 N·m

   Caution:

   - DO NOT bend or damage brake tube.
   - DO NOT allow any foreign matter such as dirt and dust to enter brake pipe from joint parts.
   - After removing brake line, perform sealing treatment to prevent foreign matter from entering.

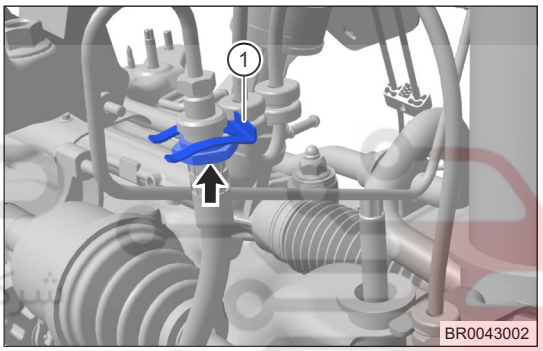

   (b) Disengage fixing part (arrow) of front left brake hose assembly from front left shock absorber assembly.

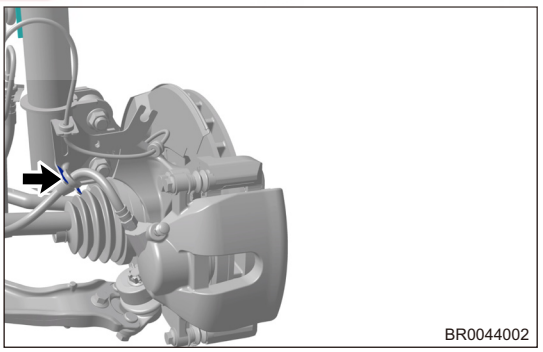

   (c) Remove coupling plug (arrow) between front left brake caliper assembly and front left brake hose assembly.

   Tightening torque
   20 ± 2 N·m

   Caution:

   - DO NOT allow brake fluid to be sprayed on your clothes or skin when removing brake hose, as brake fluid is corrosive.

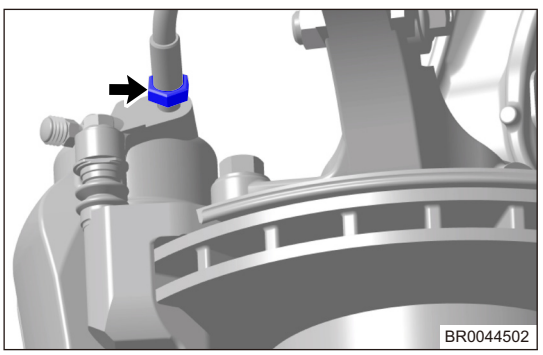

   (d) Remove the front left brake hose assembly.

WWW.DIGITALKHODRO.COM 021 62 99 92 92

WWW.DIGITALKHODRO.COM 021 62 99 92 92

Installation

1. Installation is in the reverse order of removal.
   - Be sure to tighten fixing plugs to specified torques during installation.
   - Be sure to check brake system for leakage after installation. Repair or replace malfunctioning parts as necessary.
   - Be sure to perform bleeding procedures for brake system after installation.
   - Be sure to add brake fluid to a proper level after installation.

دیجیتال خودرو
شرکت دیجیتال خودرو سامانه (مسئولیت محدود)
اولین سامانه دیجیتال تعمیرکاران خودرو در ایران

WWW.DIGITALKHODRO.COM 021 62 99 92 92

WWW.DIGITALKHODRO.COM 021 62 99 92 92

Rear Disc Brake Assembly

Description

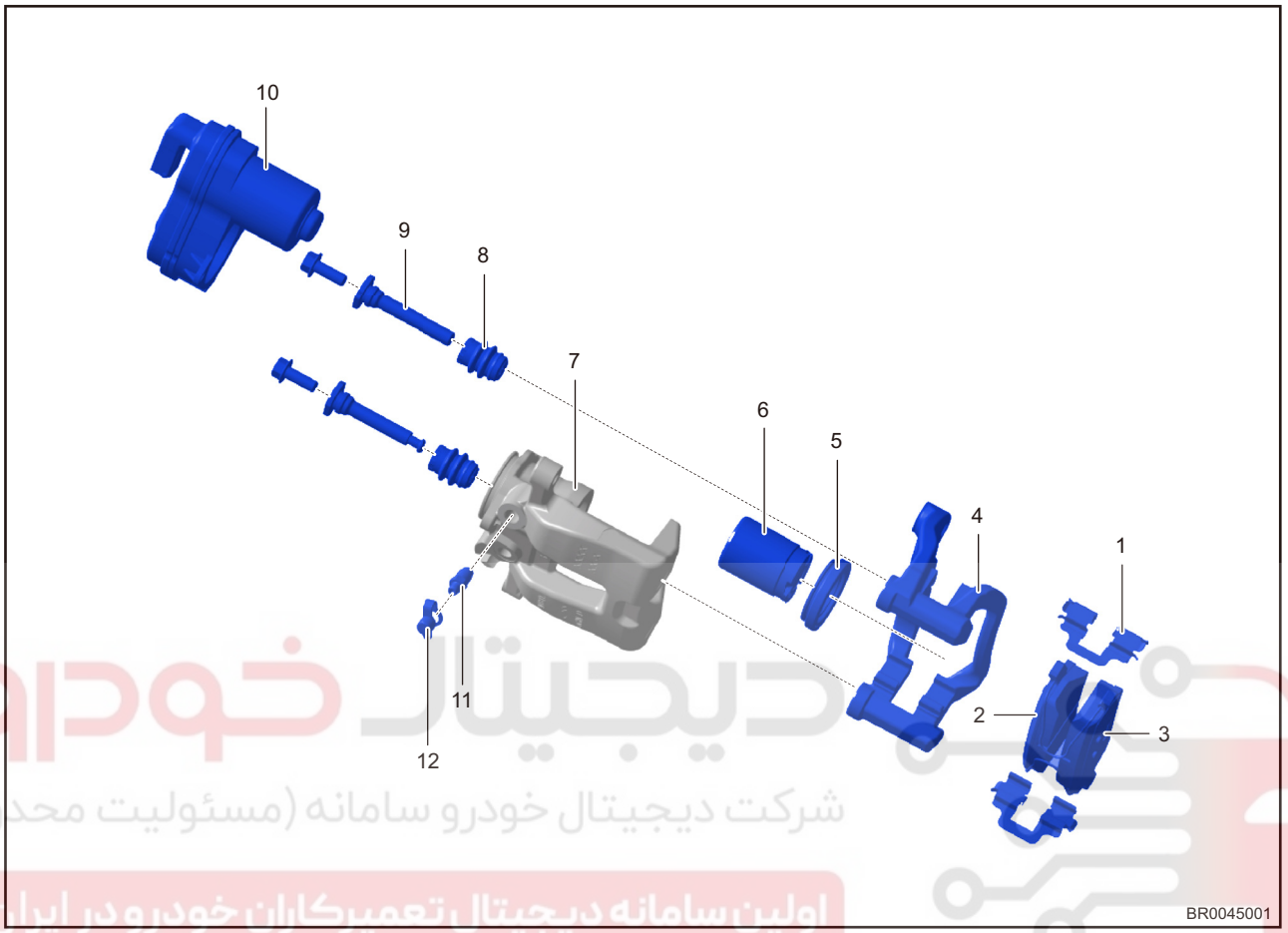

1 - Upper Support Shim	2 - Inner Brake Lining
3 - Outer Brake Lining	4 - Rear Disc Brake Caliper Fixing Bracket
5 - Rear Disc Brake Piston Dust Boot	6 - Rear Disc Brake Piston
7 - Rear Disc Brake Cylinder	8 - Brake Caliper Guide Bolt Guide Pin
9 - Brake Caliper Guide Bolt	10 - Parking Actuator
11 - Bleeder Screw	12 - Bleeder Screw Cap

شرکت دیجیتال خودرو سامانه (مسئولیت محدود)
اولین سامانه دیجیتال تعمیرکاران خودرو در ایران

WWW.DIGITALKHODRO.COM 021 62 99 92 92

WWW.DIGITALKHODRO.COM 021 62 99 92 92

On-vehicle Inspection

1. Check the brake disc runout.
   (a) Remove the rear wheel (See page 20-8).
   (b) Fix dial indicator (1) to a proper position, then set its pointer to a position about 10 mm from out edge of rear brake disc.
   (c) Turn brake disc (2) slowly and check its runout, mark the lowest and highest points and record these measured value.

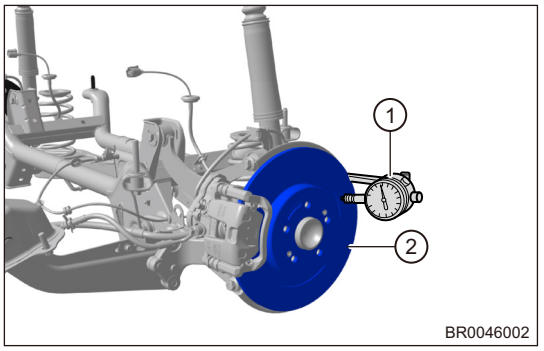

   (d) Check the runout on the other side of brake disc in the same manner, mark the lowest and highest points and record these measured value.
   (e) Compare recorded runout value with limit value.
   Rear brake disc runout: Less than 0.06 mm
   (f) If runout exceeds the maximum value, replace brake disc.

Removal

Warning/Caution/Hint

Hint:

- Use same procedures for right and left sides.
- Procedures listed below are for left side.

1. Remove the rear left wheel (See page 20-8).
2. Remove the rear left brake caliper assembly.
   Caution:
   - Be sure to perform "Enter Parking Brake Maintenance Mode" using diagnostic equipment before removal.
   (a) Unplug parking actuator connector (arrow) from EPB caliper.

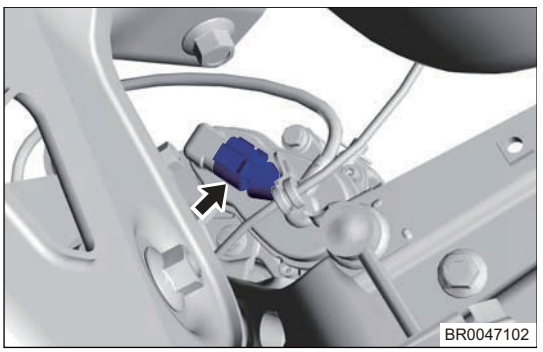

WWW.DIGITALKHODRO.COM 021 62 99 92 92

WWW.DIGITALKHODRO.COM 021 62 99 92 92

(b) Remove coupling bolt and washer (arrow) between rear left brake caliper assembly and rear left brake hose assembly.

Tightening torque
27 ± 2 N·m

Caution:
- DO NOT allow brake fluid to be sprayed on your clothes or skin when removing brake hose, as brake fluid is corrosive.

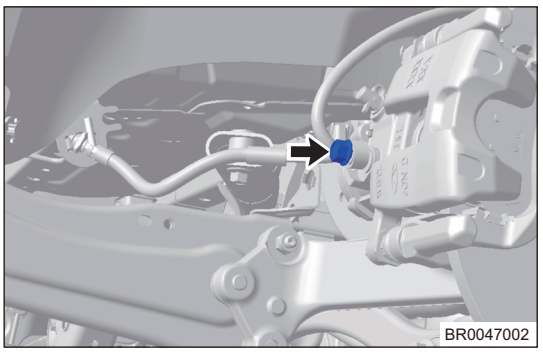
BR0047002

(c) Remove coupling bolts (arrow) between rear left brake caliper assembly and left brake caliper mounting board assembly.

Tightening torque
90 ~ 110 N·m

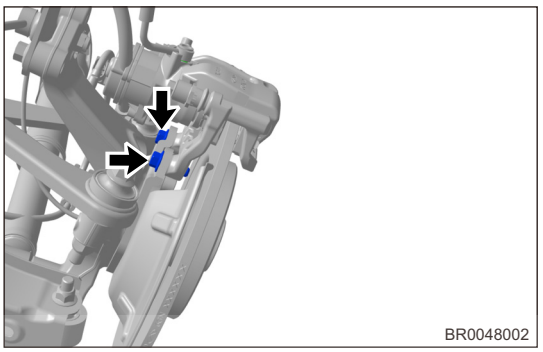
BR0048002

(d) Remove the rear left brake caliper assembly.

3. Remove the rear left brake disc.

(a) Remove locating screws (arrow) from rear left brake disc, and remove rear left brake disc.

Tightening torque
4.5 ± 0.5 N·m

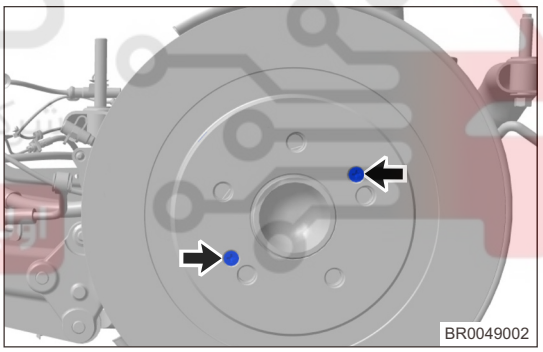
BR0049002

شرکت دیجیتال خودرو سامانه (سهامی خاص محدود)
اولین سامانه دیجیتال تعمیرکاران خودرو در ایران

Disassembly

Warning/Caution/Hint

Hint:
- Use same procedures for right and left sides.
- Procedures listed below are for left side.

1. Remove the parking actuator.

(a) Remove 2 parking actuator fixing screws (arrow).

Tightening torque
9 ~ 11 N·m

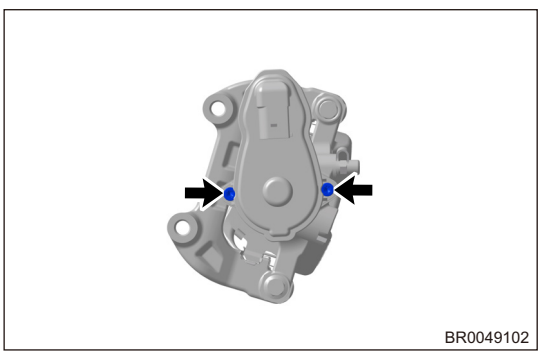
BR0049102

WWW.DIGITALKHODRO.COM 021 62 99 92 92

WWW.DIGITALKHODRO.COM 021 62 99 92 92

2. Remove the bleeder screw (with bleeder screw cap).
   (a) Remove bleeder screw (with bleeder screw cap) (arrow) from brake caliper assembly.

   Tightening torque
   9 ~ 11 N·m

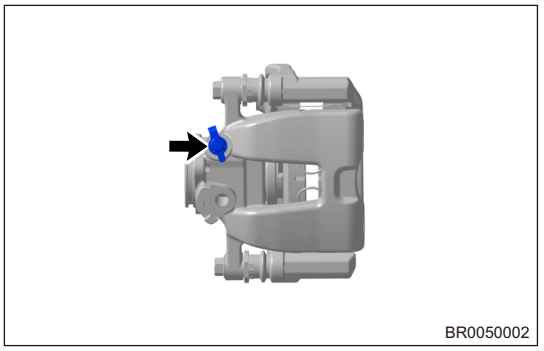
BR0050002

3. Remove the brake cylinder assembly.
   (a) Remove 2 guide bolts (arrow) between brake caliper fixing bracket and brake cylinder assembly.

   Tightening torque
   22 ~ 32 N·m

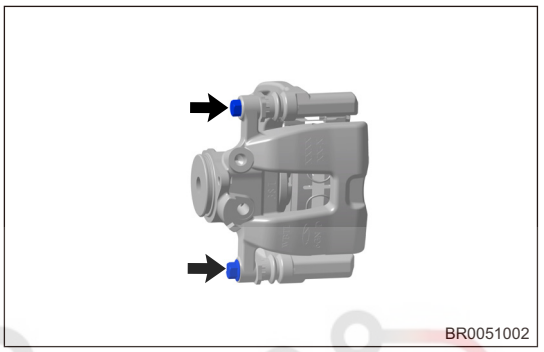
BR0051002

   (b) Separate brake cylinder assembly from brake caliper fixing bracket.
   Warning:
   - Slowly operate when performing this procedure using caliper with slanted spring, or brake plate may be popped out by spring, be careful not to injuring your feet.

4. Remove the rear brake caliper guide bolt guide pin (with dust boot).
   (a) Remove 2 brake caliper guide bolt guide pins (with dust boot) (arrow) from brake caliper fixing bracket.

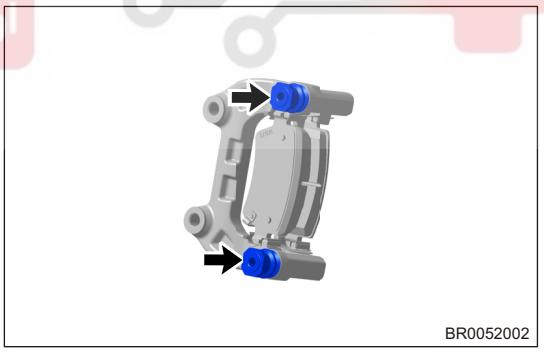
BR0052002

5. Remove the rear brake lining.
   (a) Remove inner brake lining and outer brake lining (arrow) from brake caliper fixing bracket.

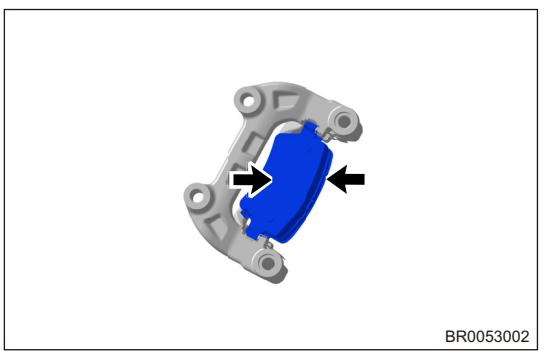
BR0053002

WWW.DIGITALKHODRO.COM 021 62 99 92 92

WWW.DIGITALKHODRO.COM 021 62 99 92 92

6. Remove the brake lining support shim.
   (a) Remove 2 brake lining support shims (arrow) from brake caliper fixing bracket.

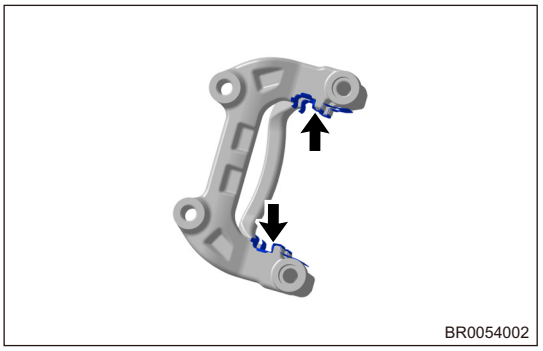

Inspection

1. Check brake caliper fixing bracket and brake caliper guide pin set.
   (a) Clean the contact surfaces of brake caliper fixing bracket and brake lining support shims with brake cleaner. Check for deformation, cracks, rust and foreign matter which is difficult to remove.
   (b) Check brake caliper guide pin rubber dust boot for deformation, cracks, wear and foreign matter which is difficult to remove.
   (c) Install the brake caliper guide pin and its rubber dust boot to brake caliper fixing bracket. Brake caliper guide pin set should move smoothly without sticking when pushing it with hand; otherwise replace it.
   (d) After installing the brake lining, check if it is easy to drop (due to insufficient elasticity of support shim). Replace as necessary.
2. Check the brake lining.
   (a) Visually check the brake lining for flatness, and also check for excessive wear. If the condition of lining cannot be confirmed accurately only by visual inspection, perform physical inspection as necessary.
   (b) Measure the minimum brake lining thickness. When the minimum thickness of brake lining is 2 mm or less, replace the brake linings.

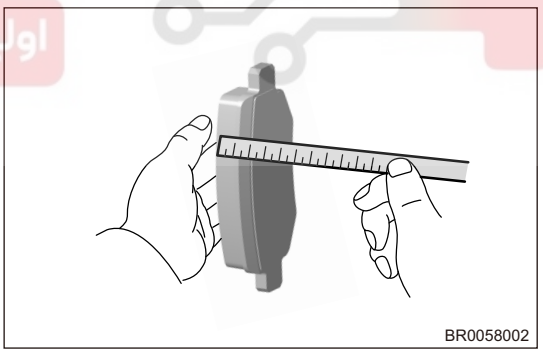

   (c) When replacing the excessively worn brake linings (inner and outer), it is also necessary to replace the linings on opposite side of vehicle as well as unchecked linings to maintain proper braking performance. If it is unnecessary to replace brake linings, be sure to reinstall brake linings to original positions.

3. Check the brake disc.
   (a) Minor scratch or wear on brake disc surface is acceptable. If severe scratch or deformation exists, the brake disc must be replaced.
   (b) Excessive wear of brake disc may cause poor contact between brake lining and surface of brake disc. If protrusion on the disc is not removed before installing new brake lining, it will cause abnormal wear of brake disc.
   (c) It is normal that the surface of brake disc is worn when replacing brake lining. If cracks or burned spots exist, the brake disc must be replaced.

WWW.DIGITALKHODRO.COM 021 62 99 92 92

WWW.DIGITALKHODRO.COM 021 62 99 92 92

4. Check the brake disc thickness.

   (a) Using a vernier caliper, measure brake disc thickness at center of brake lining contact surface as shown in illustration.
   Standard thickness: 10 mm
   Minimum thickness: 8 mm

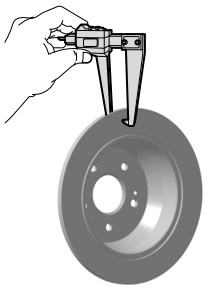
BR0059002

   (b) If it is less than the minimum thickness due to the wear of brake disc, replace brake disc.
   Caution:
   - DO NOT machine the brake disc, because it may make brake disc thickness less than the minimum.

Assembly

Warning/Caution/Hint

Hint:
- Use same procedures for right and left sides.
- Procedures listed below are for left side.

Hint:
- When assembling brake caliper assembly, always keep your hands clean.
- When assembling brake caliper assembly, always use new clean brake fluid.
- Never use old rear disc brake piston seal ring.

1. Install the brake lining support shim.

   (a) Securely install upper and lower support shims (arrow) onto brake caliper fixing bracket.

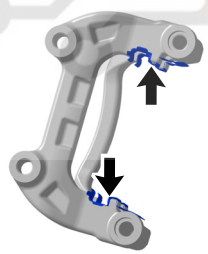
BR0054002

2. Install the rear brake lining.

   (a) Securely install inner brake lining and outer brake lining (arrow) onto brake caliper fixing bracket. Make sure they are clamped in place.

   Caution:
   - Make sure contact surface of lining and brake disc is free of oil and grease.

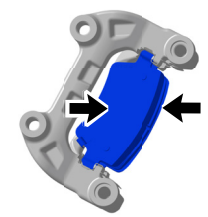
BR0053002

WWW.DIGITALKHODRO.COM 021 62 99 92 92

WWW.DIGITALKHODRO.COM 021 62 99 92 92

3. Install the rear brake caliper guide bolt guide pin (with dust boot).
   (a) Apply a small amount of grease to the contact surface between guide bolt guide pin and guide pin rubber dust boot (arrow), and securely install them to brake caliper fixing bracket.

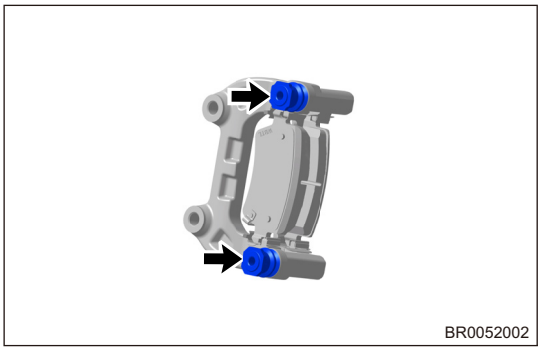
BR0052002

4. Firmly press the brake piston.
   (a) Using brake cylinder piston pressing tool, slightly retract brake cylinder piston.

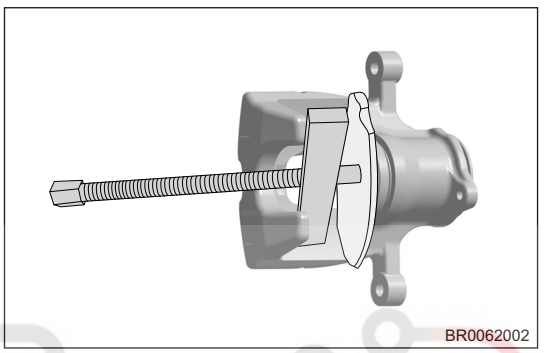
BR0062002

5. Install the slanted spring.
   (a) Pinch the well installed brake plate with hand, so that it closes to brake disc.
   (b) Install 2 legs of slanted spring into small holes on support lugs at the same side of inner and outer brake plates separately, and install slanted spring on the other side while keeping brake plates clamped.

   Warning:
   - Slowly operate when performing this procedure using caliper with slanted spring, or brake plate may be popped out by spring, be careful not to injuring your feet.

6. Install the brake cylinder assembly.
   (a) Align brake caliper guide bolts (arrow) with guide pin holes and securely install brake cylinder assembly.

   Tightening torque
   22 ~ 32 N·m

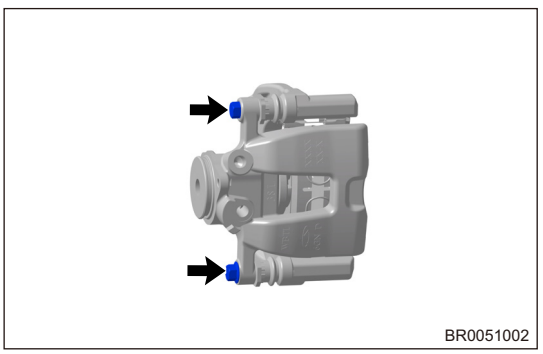
BR0051002

WWW.DIGITALKHODRO.COM 021 62 99 92 92

WWW.DIGITALKHODRO.COM 021 62 99 92 92

7. Install the bleeder screw (with bleeder screw cap).
   (a) Securely install bleeder screw (with bleeder screw cap) (arrow) to rear brake caliper assembly.

   Tightening torque
   9 ~ 11 N·m

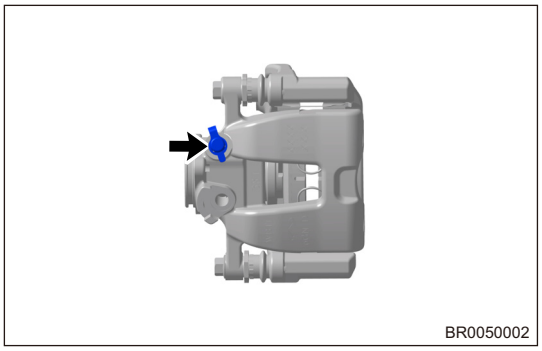
BR0050002

8. Install the parking actuator.
   (a) Install 2 parking actuator fixing screws (arrow).

   Tightening torque
   9 ~ 11 N·m

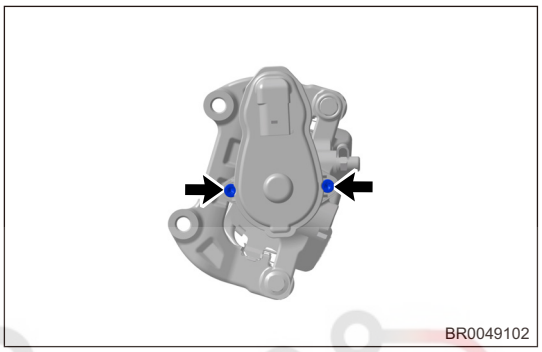
BR0049102

Installation

1. Installation is in the reverse order of removal.

Caution:
- Make sure to tighten fixing bolt and nut to specified torque during installation.
- Before installing brake linings, completely retract brake caliper piston back into bore of brake caliper.
- Depress brake pedal several times to secure brake linings to brake disc in order to ensure safety after installing brake linings and before moving vehicle.
- Replace the brake linings in pairs. DO NOT replace one alone.
- DO NOT install inner brake lining and outer brake lining reversely.
- Be sure to check brake system for leakage after installation. Repair or replace malfunctioning parts as necessary.
- Be sure to perform bleeding procedures for brake system after installation.
- Be sure to add brake fluid to a proper level after installation.
- Be sure to perform "Exit Parking Brake Maintenance Mode" using diagnostic equipment after installation.

WWW.DIGITALKHODRO.COM 021 62 99 92 92

WWW.DIGITALKHODRO.COM 021 62 99 92 92

Rear Brake Hose Assembly

Removal

Warning/Caution/Hint

Caution:

- Be sure to wear necessary safety equipment to prevent accidents when repairing.
- Try to prevent body paint surface from being scratched during removal and installation.

Hint:

- Use same procedures for right and left sides.
- Procedures listed below are for left side.

1. Drain the brake fluid (See page 22-12).

   Hint:

   - Drained brake fluid should be well kept in a container. Never discard it at will.

   Caution:

   - Wash off brake fluid immediately if it comes in contact with any paint surface.

2. Remove the rear left brake hose assembly.

   (a) Remove coupling bolt and washer (arrow) between rear left brake caliper assembly and rear left brake hose assembly.

   Tightening torque
   27 ± 2 N·m

   Caution:

   - DO NOT allow brake fluid to be sprayed on your clothes or skin when removing brake hose, as brake fluid is corrosive.

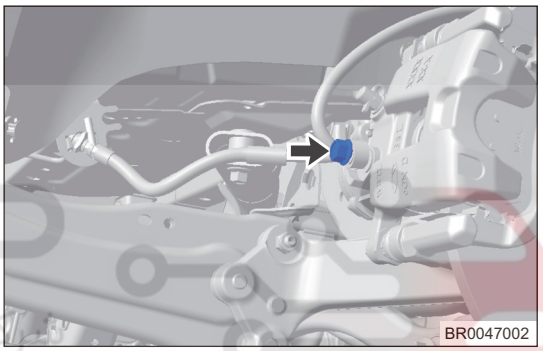

   (b) Loosen coupling plug (arrow) between rear left brake hose assembly and rear brake pipe, and move away clip (1).

   Tightening torque
   18 ± 2 N·m

   Caution:

   - DO NOT bend or damage brake tube.
   - DO NOT allow any foreign matter such as dirt and dust to enter brake pipe from joint parts.
   - After removing brake line, perform sealing treatment to prevent foreign matter from entering.

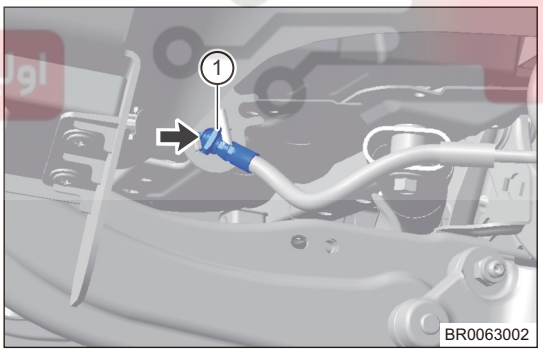

   (c) Remove the rear left brake hose assembly.

Installation

1. Installation is in the reverse order of removal.

   Caution:

   - Be sure to tighten bolts and plugs in place during installation.
   - Be sure to check brake system for leakage after installation. Repair or replace malfunctioning parts as necessary.
   - Be sure to perform bleeding procedures for brake system after installation.
   - Be sure to add brake fluid to a proper level after installation.

WWW.DIGITALKHODRO.COM 021 62 99 92 92

WWW.DIGITALKHODRO.COM 021 62 99 92 92

ELECTRONIC PARKING BRAKE SYSTEM

GENERAL INFORMATION **23-3**
- **Overview** **23-3**
  - Description 23-3
  - Function Description 23-3
  - System Function Introduction 23-4
  - Meter Indicator Light and Prompt Information 23-7
  - Specifications 23-7
  - Tools 23-8

DIAGNOSIS & TESTING **23-9**
- **Diagnosis Content** **23-9**
  - Diagnostic Help 23-9
  - Intermittent Troubleshooting 23-9
  - Ground Inspection 23-9
  - DTC Confirmation Procedure 23-9
  - Diagnosis Procedure 23-10
  - Diagnostic Trouble Code (DTC) Chart 23-12
- **C1800-93** **23-13**
- **C1801-93** **23-13**
- **C1800-19** **23-16**
- **C1801-19** **23-16**
- **C1800-74** **23-19**
- **C1801-74** **23-19**
- **C1800-73** **23-21**
- **C1801-73** **23-21**
- **C1800-72** **23-24**
- **C1801-72** **23-24**
- **C1800-91** **23-26**
- **C1801-91** **23-26**
- **C1800-92** **23-28**
- **C1801-92** **23-28**
- **C1800-97** **23-30**
- **C1801-97** **23-30**
- **C1802-17** **23-33**
- **C1802-16** **23-34**
- **C1803-95** **23-36**
- **C1804-53** **23-37**
- **C182B-62** **23-38**
- **C1824-01** **23-40**
- **C1822-00** **23-40**
- **C1824-1E** **23-40**
- **C1825-01** **23-43**
- **C1821-00** **23-43**
- **C1825-1E** **23-43**
- **C1830-00** **23-46**
- **C1831-00** **23-46**
- **C1833-00** **23-48**
- **C1832-00** **23-48**
- **C1826-01** **23-50**
- **C1807-98** **23-52**
- **C1806-16** **23-53**
- **C1823-00** **23-56**

ON-VEHICLE SERVICE **23-58**
- **EPB System** **23-58**
  - On-vehicle Inspection 23-58
- **Integrated Caliper Motor** **23-59**
  - Removal 23-59
  - EPB Brake Caliper Emergency Release 23-60
  - Installation 23-60
- **Rear Brake Lining** **23-61**
  - Removal 23-61
  - Installation 23-62
- **EPB Switch** **23-69**
  - Inspection of EPB switch 23-69

WWW.DIGITALKHODRO.COM 021 62 99 92 92

دیجیتال خودرو
شرکت دیجیتال خودرو سامانه (مسئولیت محدود)
اولین سامانه دیجیتال تعمیرکاران خودرو در ایران

WWW.DIGITALKHODRO.COM 021 62 99 92 92

GENERAL INFORMATION

Overview

Description

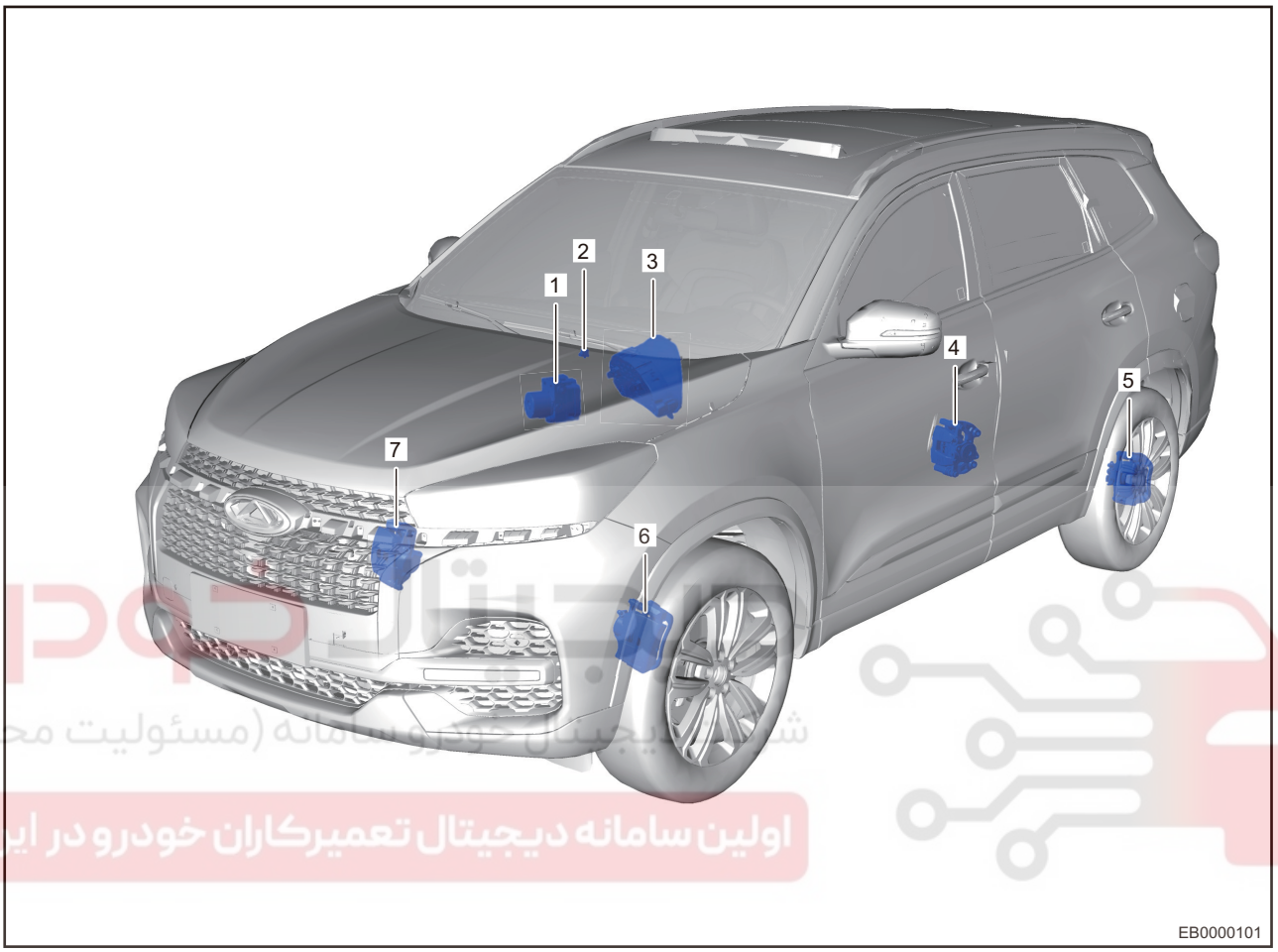

1 - ESP Control Module	2 - EPB Button Assembly
3 - Meter	4 - Rear Right Integrated Caliper Assembly
5 - Rear Left Integrated Caliper Assembly	6 - Front Left Brake Caliper Assembly
7 - Front Right Brake Caliper Assembly	

Function Description

EPB (Electrical Parking Brake) system: electrical parking brake system can apply parking brake and emergency brake by electronic control, and traditional handbrake operation is replaced by electronic parking button.

Automatic parking function: After automatic parking function is started, stop vehicle by service brake, release brake pedal to park automatically.

WWW.DIGITALKHODRO.COM 021 62 99 92 92

WWW.DIGITALKHODRO.COM 021 62 99 92 92

System Function Introduction

I: Manual Parking Function

Function	Vehicle Status	Engine Status	Key Status	EPB Status	Operation Method	HMI Status	
						Instrument Cluster	Switch
Manual Parking	Stationary	Ignited	ON	Stall	Pull up EPB switch	Red P light comes on (goes off 20 seconds after engine stalled)	EPB switch indicator comes on (goes off 20 seconds after engine stalled)
		Stall	ON				

II: Manual Releasing Function

Function	Vehicle Status	Engine Status	Key Status	EPB Status	Operation Method	HMI Status	
						Instrument Cluster	Switch
Manual Releasing Function	Stationary	Ignited/Stall	ON	Firmly applied	Depress brake pedal and press EPB switch simultaneously	Red P light goes off	EPB switch indicator goes off
					Depress accelerator pedal and press EPB switch simultaneously		

III: Stall and Park

With vehicle in stationary status, turn off engine with key or turn key to OFF from ON position, EPB system will park automatically.

For vehicles with start and stop function, when engine stalls with start and stop function operating, parking state of vehicle will not change.

Automatic parking also operates at stall when starting off.

Function	Vehicle Status	Engine Status	Key Status	EPB Status	Operation Method	HMI Status	
						Instrument Cluster	Switch
Stall and Park	Stationary	Ignited → Stall	ON	Released	Turn ENGINE START STOP switch to OFF	Red P light comes on (goes off 20 seconds after engine stalled)	EPB switch indicator comes on (goes off 20 seconds after engine stalled)
		Stall					

IV: EPB Automatic Releasing

Function	Vehicle Status	Engine Status	Key Status	EPB Status	Driver Door Status	Gear Position	Operation Method	HMI Status	
								Instrument Cluster	Switch
EPB Automatic Releasing	Stationary	Ignited	ON	Firmly applied	Closed	Driving or reverse position	Accelerator pedal depressed	Red P light goes off	EPB switch indicator goes off

WWW.DIGITALKHODRO.COM 021 62 99 92 92

WWW.DIGITALKHODRO.COM 021 62 99 92 92

V: Automatic Parking Function ON
1. This function is four wheels parking brake supplied by ESP system.
2. After automatic parking, when any of following conditions is met, automatic parking will exit and turn to electrical caliper parking, parking light will turn to red P from green P, and a "fizz" sound of electrical caliper will be heard and it is normal operating sound; if there is a malfunction in system, yellow P comes on simultaneously.
a. Automatic parking is more than 10 minutes.
b. Turn automatic parking function off manually.
c. Open the driver door.
d. ESP system is malfunctioning.
e. Engine stalls.
3. Operation methods for automatic parking and automatic releasing are as shown in table below.

Function	Vehicle Status	Engine Status	Driver Door Status	Operation Method	HMI Status	
					Instrument Cluster	Switch
Automatic Parking Function ON	Stationary	Ignited	Closed	Press automatic parking switch	/	Automatic parking switch indicator comes on

VI: Automatic Parking

Function	Vehicle Status	Engine Status	EPB Status	Driver Door Status	Operation Method	HMI Status	
						Instrument Cluster	Switch
Automatic Parking	Stationary Driving → Stationary	Ignited	Released	Closed	Depress brake pedal	Green P light comes on	Automatic parking switch indicator comes on

VII: Automatic Releasing

Function	Vehicle Status	Engine Status	Automatic Parking Status	Driver Door Status	Operation Method	HMI Status	
						Instrument Cluster	Switch
Automatic Releasing	Driving → Stationary	Ignited	Firmly applied	Closed	Depress accelerator pedal	Green P light goes off	Automatic parking switch indicator comes on

VIII: Reclamping Function
1. If system enters parking status after keeping brake disc at excessively high temperature for a long time (under conditions such as service brake or down-hill HDC ON), electric parking system will perform second clamping according to the brake disc temperature for safety; during the second clamping process, system will produce a certain operating sound, which is normal.
2. If vehicle coasts after stopping (within 10 minutes), for safety, system will increase parking brake force automatically, to make vehicle stationary; during the process of increasing parking brake force, system will produce a certain operating sound, which is normal.
3. Functions of reclamping at coasting and reclamping at high temperature are performed automatically by system without any operation.

Function	Vehicle Status	Engine Status	Key Status	EPB Status	HMI Status	
					Instrument Cluster	Switch
Reclamping at Coasting Reclamping at High Temperature	Stationary	Ignited/Stall	ON or OFF (within 10 minutes)	Reclamping	No P light comes on	No indicator comes on

WWW.DIGITALKHODRO.COM 021 62 99 92 92

WWW.DIGITALKHODRO.COM 021 62 99 92 92

IX: Trailer Mode
1. EPB caliper will not clamp automatically after stalling in trailer mode for towing vehicle.
2. Operation method for entering trailer mode is as shown in table below.

Function	Vehicle Status	Engine Status	Key Status	EPB Status	Operation Method	HMI Status	
						Instrument Cluster	Switch
Trailer Mode	Stationary	Ignited/Stall	ON	Released	Turn off engine while keeping EPB switch pressed	No P light comes on	No indicator comes on

X: Roller Mode
1. This mode is used in brake detection during annual inspection of vehicle. EPB system will enter roller mode automatically only when following conditions are met without performing other operations, and there is no any indication on instrument cluster.
2. Operation method for entering roller mode is as shown in table below.

Function	Vehicle Status	Engine Status	Key Status	Operation Method	HMI Status	
					Instrument Cluster	Switch
Roller Mode	Driving	Ignited	ON	Front wheel speed is 0.36 km/h or less; rear wheel speed is 1.8-18 km/h; difference between two wheels speed is 1.8 km/h or less	Yellow P light flashes	No indicator comes on

XI: Service Mode
1. This mode is used when checking and repairing EPB system.
2. When entering service mode, EPB caliper will be released in place automatically.
3. Never perform "Exit Maintenance Mode" if inspection and repair of vehicle are not finished, to prevent serious accident.
4. Diagnostic tester must be used to perform "Exit Maintenance Mode" after inspection and repair of vehicle are finished (such as replacing brake linings with new ones), failure to do so may cause vehicle to lose EPB function, however, conventional braking will not be affected.
5. When service mode function is triggered, a "drone" sound will be heard, it is normal.
6. Operation methods for entering and exiting service mode are as shown in table below.

Function	Vehicle Status	Engine Status	Key Status	Operation Method	HMI Status	
					Instrument Cluster	Switch
Service Mode	Stationary	Ignited/Stall	ON	Entering or exiting is performed using diagnostic tester or by professional technicians at 4S shop	Red P and yellow P lights flash when entering service mode, and reflect EPB status of real-vehicle after exiting service mode	/

WWW.DIGITALKHODRO.COM 021 62 99 92 92

WWW.DIGITALKHODRO.COM 021 62 99 92 92

XII: Emergency Brake
1. This function is used when service brake becomes unavailable. Never use electric parking brake on this vehicle in emergency case other than service brake failure.
2. Emergency brake refers to the ESP system brake, and the brake force is constant during emergency brake.
3. Brake light comes on normally during emergency brake.
4. When emergency brake function is triggered, a "drone" sound will be heard, it is normal.
5. Operation methods for entering and exiting emergency brake are as shown in table below.

Function	Vehicle Status	Engine Status	Key Status	Operation Method	HMI Status	
					Instrument Cluster	Switch
Entering Emergency Brake	Driving	Ignited/Stall	ON	Pull up EPB switch and hold it when vehicle speed is more than 3 km/h	Red P light flashes	EPB switch indicator flashes
Exiting Emergency Brake	Driving	Ignited/Stall	ON	Release EPB switch/depress accelerator pedal	No P light comes on (red P light comes on after stopping vehicle)	No indicator comes on (red P light comes on after stopping vehicle)
	Driving → Stationary			Pull and hold switch unit vehicle stops		

Meter Indicator Light and Prompt Information

No.	Indicator Light Condition or Prompt Information	Indicator Light Description	Treatment
1	Yellow P light - remains ON	EPB system malfunction	Check and repair
2	Red and yellow P lights - flash simultaneously	EPB is in check and repair mode	Check and repair
3	Red P light - flashes	In emergency brake mode	Normal, don't need to repair
4	Red P light - remains ON	EPB parking function is operative	Normal, don't need to repair
5	Green P light - remains ON	Automatic parking function is operative	Normal, don't need to repair
6	"Please depress brake pedal when releasing parking brake"	Press EPB release button when parking brake is applied and brake pedal is not depressed	Depress brake pedal and press EPB button simultaneously
7	"Please close the door"	Press automatic parking switch when a door is not closed	Close driver door and then press automatic parking switch
8	"Parking slope is too large, Please take care"	Static parking on a slope is larger than 30%	It is recommend to park vehicle on a small slope

Specifications

Torque Specifications

Description	Torque (N·m)
Left Integrated Caliper Motor Fixing Bolt	10 ± 1.0
Right Integrated Caliper Motor Fixing Bolt	10 ± 1.0
Left Integrated Caliper Guide Pin Bolt	30 ± 2.0
Right Integrated Caliper Guide Pin Bolt	30 ± 2.0

WWW.DIGITALKHODRO.COM 021 62 99 92 92

WWW.DIGITALKHODRO.COM 021 62 99 92 92

Tools

General Tools

Digital Multimeter	-	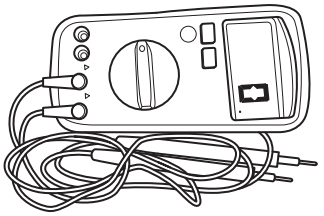 002
Rear Brake Cylinder Release Tool	Part Number: CH30003; or use used brake plate	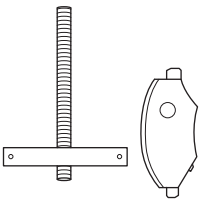 116

دیجیتال خودرو
شرکت دیجیتال خودرو سامانه (مسئولیت محدود)
اولین سامانه دیجیتال تعمیرکاران خودرو در ایران

WWW.DIGITALKHODRO.COM 021 62 99 92 92

WWW.DIGITALKHODRO.COM 021 62 99 92 92

DIAGNOSIS & TESTING

Diagnosis Content

Diagnostic Help

1. Connect diagnostic tester (the latest software) to diagnostic connector, and make it communicate with vehicle electronic module through data network.
2. Confirm that malfunction is current, and carry out diagnostic test and repair procedures.
3. If DTC cannot be deleted, malfunction is current.
4. Only use a digital multimeter to measure voltage of EPB system.
5. Refer to any Technical Bulletin that may apply to this malfunction.
6. Visually check related wire harness and connector.
7. Check and clean all EPB wire harness system grounds related to the latest DTC.
8. If multiple trouble codes were set, use circuit diagrams and look for any common ground circuit or power supply circuit applied to DTC.

Intermittent Troubleshooting

If malfunction is intermittent, perform the followings:

1. Check if connector is loose.
2. Check if wire harness is worn, pierced, pinched or partially broken.
3. Wiggle related wire harness and connector and observe if signal in related circuit is interrupted.
4. If possible, try to duplicate the conditions under which DTC was set.
5. Look for data that has changed or DTC to reset during wiggle test.
6. Look for broken, bent, protruded or corroded terminals.
7. Inspect the mounting areas of EPB system, wire harness or wire harness connector and so on for damage, foreign matter, etc. that will cause incorrect signals.
8. Check and clean all wire harness connectors and ground parts related to DTC.
9. Refer to any Technical Bulletin that may apply to this malfunction.

اولین سامانه دیجیتال تعمیرکاران خودرو در ایران

Ground Inspection

Ground points are very important to normal work of circuit, and they are often exposed to moisture, dirt and other corrosive environments. Corrosion (rust) may increase load resistance. This situation may change the way in which a circuit works. Circuits are very sensitive to proper grounding. A loose or corroded ground can affect the control circuit. Check the ground points as follows:

1. Remove ground bolt or nut.
2. Check all contact surfaces for tarnish, dirt and rust, etc.
3. Clean as necessary to ensure that contacting is in good condition.
4. Reinstall ground bolt or nut securely.
5. Check if add-on accessories interfere with ground circuit.
6. If several wire harnesses are crimped into one ground terminal, check for proper crimps. Make sure that all wire harnesses are clean and securely fastened while providing a good ground path.

DTC Confirmation Procedure

Confirm that battery voltage is over 12 V before performing following procedures

- Turn ENGINE START STOP switch to OFF.
- Connect diagnostic tester (the latest software) to diagnostic connector, and make it communicate with vehicle electronic module through data network.
- Turn ENGINE START STOP switch to ON.
- Use diagnostic tester to record and clear DTCs stored in EPB system.
- Turn ENGINE START STOP switch to OFF and wait several seconds.
- Turn ENGINE START STOP switch to ON, select "Read DTC".
- If DTC is not detected, malfunction indicated by DTC is intermittent.

WWW.DIGITALKHODRO.COM 021 62 99 92 92

WWW.DIGITALKHODRO.COM 021 62 99 92 92

Diagnosis Procedure

Hint:

- Use following procedures to troubleshoot the brake control system.

1	Vehicle brought to workshop

Result

Proceed to
Next

Next

2	Check battery voltage

Check if battery voltage is normal.

OK

Standard Voltage: Not less than 12 V

Result

Proceed to
OK
NG

NG → Replace battery or inspect and repair charging system

OK

3	Customer problem analysis

Result

Proceed to
Next

Next

4	Check and clear DTCs

Result

Proceed to
Next

Next

WWW.DIGITALKHODRO.COM 021 62 99 92 92

WWW.DIGITALKHODRO.COM 021 62 99 92 92

5	Confirm and duplicate malfunction: accelerate vehicle to 40 km/h or above, simulate malfunction conditions and read DTCs again

Result

Result
No DTC
Current DTC
History DTC

History DTC

6	Problem Repair (No DTC)

Result

Proceed to
Next

Next → Go to step 8

7	Troubleshoot according to Diagnostic Trouble Code (DTC) chart

Result

Proceed to
Next

Next → Go to step 8

8	Troubleshoot according to Problem Symptoms Table

Result

Proceed to
Next

Next

9	Conduct test and confirm malfunction has been repaired

Result

Proceed to
Next

Next → End

WWW.DIGITALKHODRO.COM 021 62 99 92 92

WWW.DIGITALKHODRO.COM 021 62 99 92 92

Diagnostic Trouble Code (DTC) Chart

DTC	DTC Definition
C1800-93	Left Actuator
C1800-19	Left Actuator
C1800-74	Left Actuator
C1800-73	Left Actuator
C1800-72	Left Actuator
C1800-91	Left Actuator
C1800-92	Left Actuator
C1800-97	Left Actuator
C1801-93	Right Actuator
C1801-19	Right Actuator
C1801-74	Right Actuator
C1801-73	Right Actuator
C1801-72	Right Actuator
C1801-91	Right Actuator
C1801-92	Right Actuator
C1801-97	Right Actuator
C1802-17	Supply Voltage
C1802-16	Supply Voltage
C1803-95	Assembly Test
C1804-53	Maintenance Mode
C182B-62	APB Act_Plausibility
C1824-01	APBActL_ElectricalFailure
C1825-01	APBActR_ElectricalFailure
C1822-00	APBActL_Failure
C1821-00	APBActR_Failure
C1824-1E	APBActL_ShuntOnLineOrECU
C1825-1E	APBActR_ShuntOnLineOrECU
C1830-00	APBActL_CAT
C1833-00	APBActR_UnintendedRun
C1831-00	APBActR_CAT
C1832-00	APBActL_UnintendedRun
C1826-01	APBActDriverGen_ElectricalFailure
C1807-98	Disc Over Heat
C1806-16	APB Button Under Voltage
C1823-00	APB Motor Enable Line Violation

WWW.DIGITALKHODRO.COM 021 62 99 92 92

WWW.DIGITALKHODRO.COM 021 62 99 92 92

DTC	C1800-93	Left Actuator

DTC	C1801-93	Right Actuator

Circuit Diagram

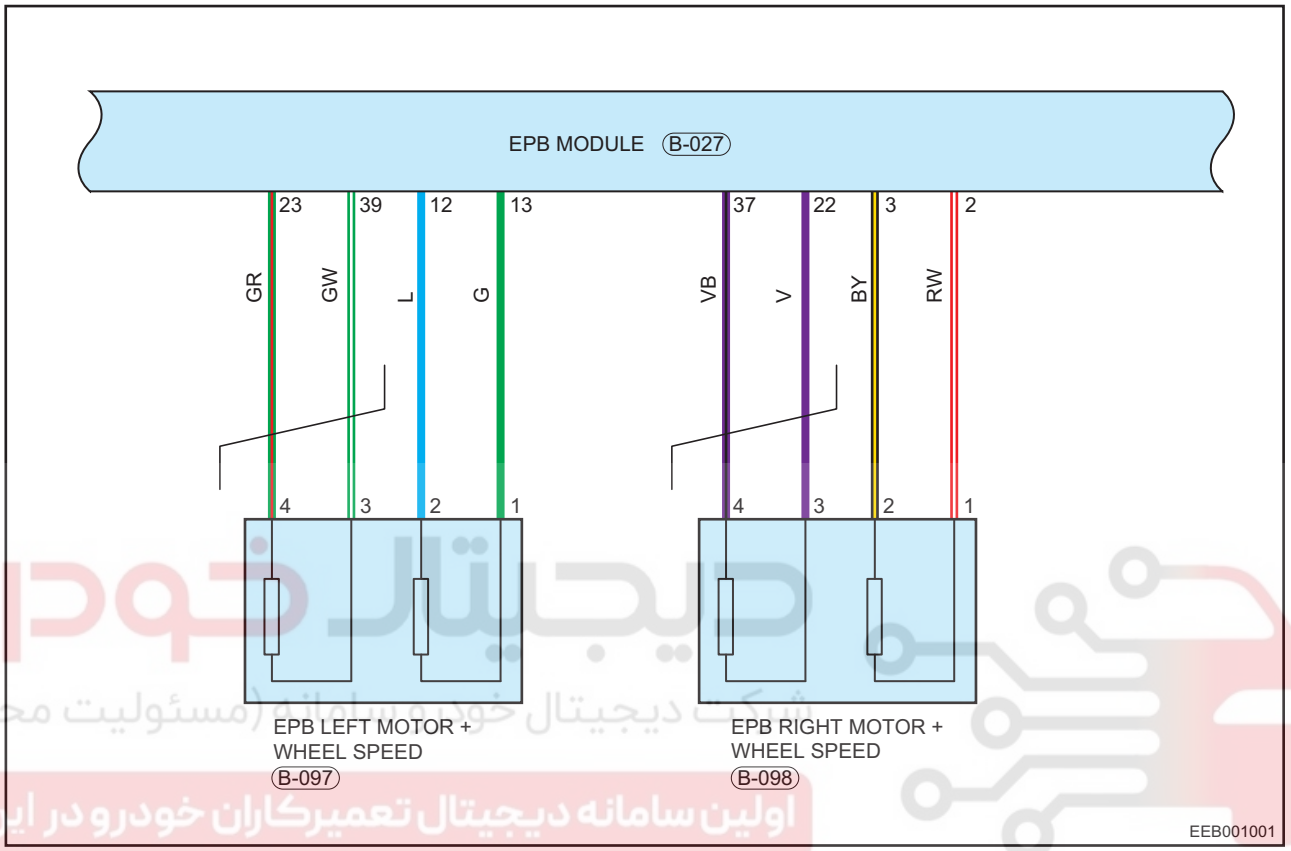

Description

EPB software detects that the current is lower than threshold value when motor starts and duration is too long.

DTC	DTC Definition	DTC Detection Condition	Possible Cause	Disabled Function	Malfunction Condition
C1800-93	Left Actuator	ENGINE START STOP switch is in ON	• Actuator wire harness resistance is too big	• Dynamic park • Actuator parking function • Actuator releasing function	• EPB malfunction light comes on • Actuator cannot perform parking / releasing operation
C1801-93	Right Actuator				

Caution:

When performing circuit diagnosis and test, always refer to the circuit diagram for specific circuit and component information.

Procedure

1	Inspect left actuator wire harness or connector

(a) Turn ENGINE START STOP switch to OFF.
(b) Disconnect the negative battery cable.
(c) Disconnect the left actuator wire harness connector B-097 and ESP control module connector B-027.
(d) Check wire harness, connector and terminal for deformation, bend or damage.

WWW.DIGITALKHODRO.COM 021 62 99 92 92

WWW.DIGITALKHODRO.COM 021 62 99 92 92

OK

Left actuator wire harness or connector is normal

Result

Proceed to
OK
NG

NG → **Repair or replace left actuator wire harness or connector.**

OK

2 Inspect left actuator wire harness or connector for continuity

(a) Turn ENGINE START STOP switch to OFF.
(b) Disconnect the negative battery cable.
(c) Using a digital multimeter, check for continuity between ESP control module connector B-027 and left actuator connector B-097 according to value(s) in table below.

OK

Multimeter Connection	Condition	Standard Resistance
B-027 (12) - B-097 (2)	Always	≤ 1 Ω
B-027 (13) - B-097 (1)	Always	≤ 1 Ω

Result

Proceed to
OK
NG

شرکت دیجیتال خودرو سامانه (مسئولیت محدود)
اولین سامانه دیجیتال تعمیرکاران خودرو در ایران

NG → **Repair or replace left actuator wire harness or connector**

OK

3 Test left actuator

(a) Turn ENGINE START STOP switch to OFF.
(b) Disconnect left actuator wire harness connector at luggage compartment, using a digital multimeter, measure internal resistance of left actuator according to value(s) in table below.

Warning:

- The measurement result is minus multimeter error when measuring internal resistance of actuator.

Condition	Standard Resistance
Ohms Range	0.4 Ω - 0.9 Ω

Result

Proceed to
OK
NG

NG → **Replace left actuator**

WWW.DIGITALKHODRO.COM 021 62 99 92 92

WWW.DIGITALKHODRO.COM 021 62 99 92 92

OK

4	Reconfirm DTCs

(a) Turn ENGINE START STOP switch to ON.
(b) Use diagnostic tester (the latest software) to record and clear DTC stored in EPB system.
(c) Turn ENGINE START STOP switch to OFF and wait several seconds.
(d) Turn ENGINE START STOP switch to ON.
(e) Use diagnostic tester (the latest software) to reread DTC in EPB system.

Result

Proceed to
OK
NG

OK	System operates normally
NG	Replace ESP control module

دیجیتال خودرو
شرکت دیجیتال خودرو سامانه (مسئولیت محدود)
اولین سامانه دیجیتال تعمیرکاران خودرو در ایران

WWW.DIGITALKHODRO.COM 021 62 99 92 92

WWW.DIGITALKHODRO.COM 021 62 99 92 92

DTC	C1800-19	Left Actuator

DTC	C1801-19	Right Actuator

Circuit Diagram

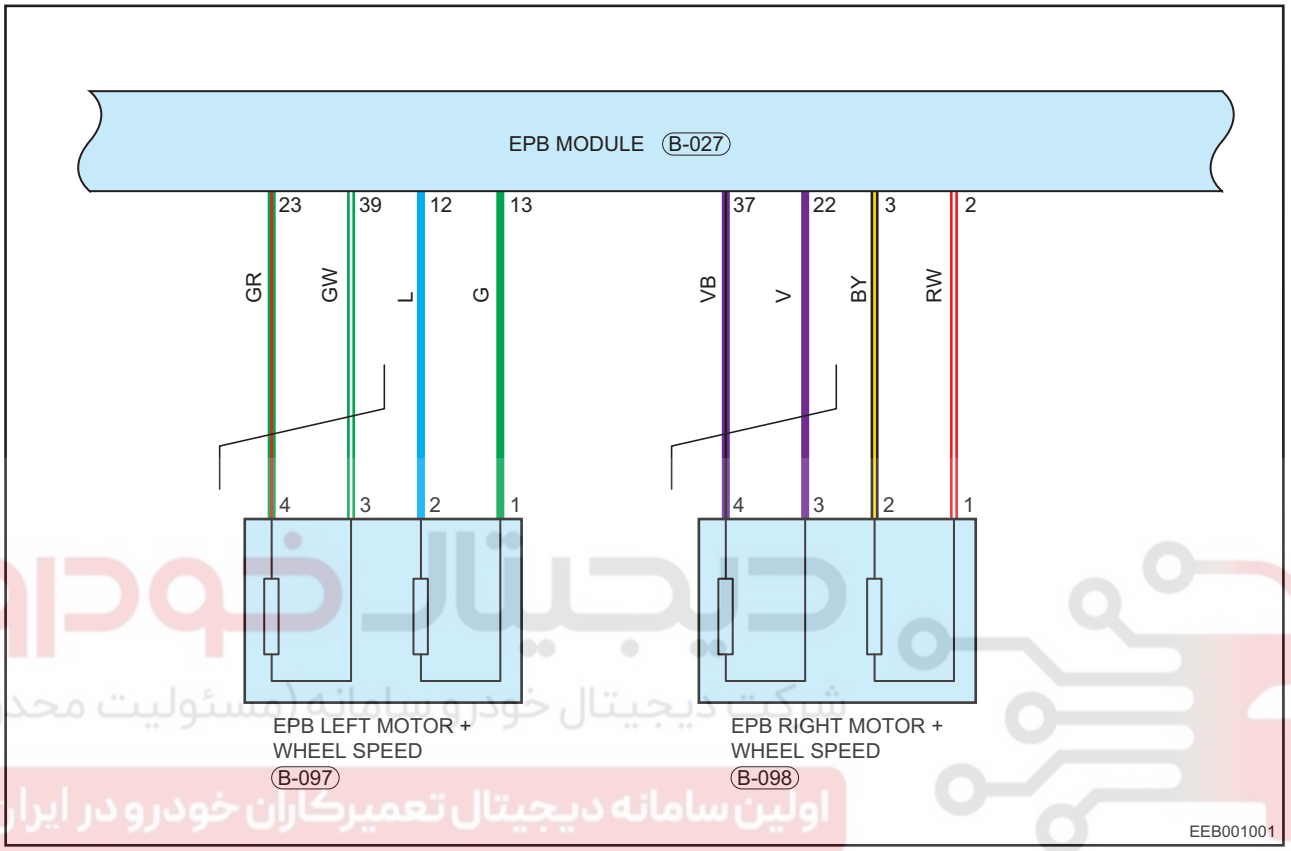

Description

EPB software detects that the current is higher than threshold value when motor starts and duration is too long.

DTC	DTC Definition	DTC Detection Condition	Possible Cause	Disabled Function	Malfunction Condition
C1800-19	Left Actuator	ENGINE START STOP switch is in ON	• Actuator wire harness or connector circuit open • Actuator wire harness resistance is too big. • Actuator internal circuit open	• Dynamic park • Actuator parking function • Actuator releasing function	• EPB malfunction light comes on • Actuator cannot perform parking / releasing operation
C1801-19	Right Actuator				

Caution:

When performing circuit diagnosis and test, always refer to the circuit diagram for specific circuit and component information.

Procedure

1	Inspect left actuator wire harness or connector

(a) Turn ENGINE START STOP switch to OFF.

WWW.DIGITALKHODRO.COM 021 62 99 92 92

WWW.DIGITALKHODRO.COM 021 62 99 92 92

(b) Disconnect the negative battery cable.
(c) Disconnect the left actuator wire harness connector B-097 and ESP control module connector B-027.
(d) Check wire harness, connector and terminal for deformation, bend or damage.

Result

Proceed to
OK
NG

NG → **Repair or replace left actuator wire harness or connector**

OK

2 Inspect left actuator wire harness or connector for short circuit

(a) Turn ENGINE START STOP switch to OFF.
(b) Disconnect the negative battery cable.
(c) Disconnect connector B-027 and left actuator connector B-097. Using a digital multimeter, check for continuity between ESP control module connector B-027 and left actuator connector B-027 and dround according to value(s) in table below.

OK

Multimeter Connection	Condition	Specified Condition
B-027 (12) - Ground	Always	∞
B-027 (13) - Ground	Always	∞
B-027 (12) - B-027 (13)	Always	∞
B-097 (1) - Ground	Always	∞
B-097 (2) - Ground	Always	∞

دیجیتال خودرو
شرکت دیجیتال خودرو سامانه (مسهام)
اولین سامانه دیجیتال تعمیرکاران خودرو در ایران

Result

Proceed to
OK
NG

NG → **Repair or replace left actuator wire harness or connector**

OK

3 Test left actuator

(a) Turn ENGINE START STOP switch to OFF.
(b) Disconnect left actuator wire harness connector at luggage compartment, using a digital multimeter, measure internal resistance of left actuator according to value(s) in table below.

Warning:

- The measurement result is minus multimeter error when measuring internal resistance of actuator.

Condition	Standard Resistance
Ohms Range	0.4 Ω - 0.9 Ω

WWW.DIGITALKHODRO.COM 021 62 99 92 92

WWW.DIGITALKHODRO.COM 021 62 99 92 92

Result

Proceed to
OK
NG

NG → **Replace left actuator**

OK

4	Reconfirm DTCs

(a) Turn ENGINE START STOP switch to ON.
(b) Use diagnostic tester (the latest software) to record and clear DTC stored in EPB system.
(c) Turn ENGINE START STOP switch to OFF and wait several seconds.
(d) Turn ENGINE START STOP switch to ON.
(e) Use diagnostic tester (the latest software) to reread DTC in EPB system.

Result

Proceed to
OK
NG

OK → **System operates normally**

NG → **Replace ESP control module**

شرکت دیجیتال خودرو سامانه (مسئولیت محدود)
اولین سامانه دیجیتال تعمیرکاران خودرو در ایران

WWW.DIGITALKHODRO.COM 021 62 99 92 92

WWW.DIGITALKHODRO.COM 021 62 99 92 92

DTC	C1800-74	Left Actuator

DTC	C1801-74	Right Actuator

Description

EPB software detects that left motor is performing parking for a certain time, but cannot complete parking.

DTC	DTC Definition	DTC Detection Condition	Possible Cause	Malfunction Condition	Disabled Function
C1800-74	Left Actuator	ENGINE START STOP switch is in ON	• Actuator mechanical malfunction	• EPB malfunction light comes on • Actuator cannot perform manual parking / releasing operation	• Dynamic park • Actuator parking function • Actuator releasing function
C1801-74	Right Actuator				

Caution:

When performing circuit diagnosis and test, always refer to the circuit diagram for specific circuit and component information.

Procedure

1	Inspect if left actuator and caliper are installed properly

(a) Turn ENGINE START STOP switch to OFF.
(b) Disconnect the negative battery cable.
(c) Disconnect the left actuator wire harness connector.
(d) Inspect if the left actuator and caliper are installed properly.

Result

Proceed to
OK
NG

NG → **Repair or reinstall left actuator and caliper**

OK

2	Test left actuator

(a) Turn ENGINE START STOP switch to OFF.
(b) Disconnect left actuator wire harness connector at luggage compartment, using a digital multimeter, measure internal resistance of left actuator according to value(s) in table below.

Warning:

- The measurement result is minus multimeter error when measuring internal resistance of actuator.

Condition	Standard Resistance
Ohms Range	0.4 Ω - 0.9 Ω

Result

Proceed to
OK
NG

WWW.DIGITALKHODRO.COM 021 62 99 92 92

WWW.DIGITALKHODRO.COM 021 62 99 92 92

NG → **Replace left actuator**

OK

3	Reconfirm DTCs

(a) Turn ENGINE START STOP switch to ON.
(b) Use diagnostic tester (the latest software) to record and clear DTC stored in EPB system.
(c) Turn ENGINE START STOP switch to OFF and wait several seconds.
(d) Turn ENGINE START STOP switch to ON.
(e) Use diagnostic tester (the latest software) to reread DTC in EPB system.

Result

Proceed to
OK
NG

OK → **System operates normally**

NG → **Replace ESP control module**

دیجیتال خودرو
شرکت دیجیتال خودرو سامانه (مسئولیت محدود)
اولین سامانه دیجیتال تعمیرکاران خودرو در ایران

WWW.DIGITALKHODRO.COM 021 62 99 92 92

WWW.DIGITALKHODRO.COM 021 62 99 92 92

DTC	C1800-73	Left Actuator

DTC	C1801-73	Right Actuator

Circuit Diagram

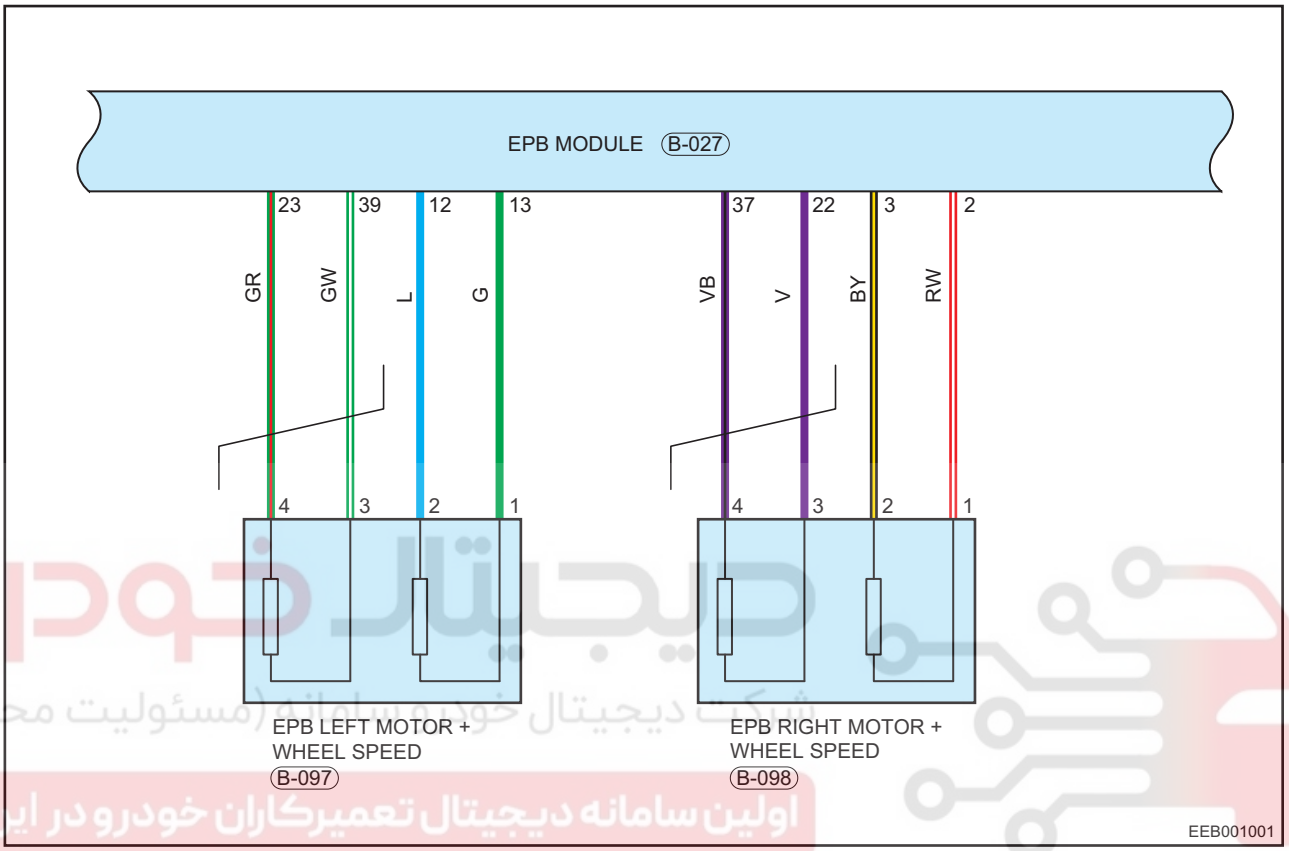

Description

EPB software detects that motor is clamping for a certain time, but cannot reach target parking force

DTC	DTC Definition	DTC Detection Condition	Possible Cause	Malfunction Condition	Disabled Function
C1800-73	Left Actuator	ENGINE START STOP switch is in ON	• System voltage low • Actuator wire harness resistance is too big • Actuator internal resistance is too big	• EPB malfunction light comes on • Actuator cannot perform parking operation properly	• Dynamic park • Actuator parking function • Actuator releasing function
C1801-73	Right Actuator				

Caution:

When performing circuit diagnosis and test, always refer to the circuit diagram for specific circuit and component information.

Procedure

1	Inspect if left actuator and caliper are installed properly

(a) Turn ENGINE START STOP switch to OFF.
(b) Disconnect the negative battery cable.

WWW.DIGITALKHODRO.COM 021 62 99 92 92

WWW.DIGITALKHODRO.COM 021 62 99 92 92

(c) Disconnect the left actuator wire harness connector.
(d) Inspect if the left actuator and caliper are installed properly.

Result

Proceed to
OK
NG

NG → **Repair or reinstall left actuator and caliper**

OK

2 Check if battery voltage is low

(a) Turn ENGINE START STOP switch to OFF.
(b) Disconnect the negative battery cable.
(c) Measure if battery voltage is lower than 12 V with a digital multimeter.

Result

Proceed to
OK
NG

NG → **Test again after charging or replacing battery**

شرکت دیجیتال خودرو سامانه (مسئولیت محدود)
اولین سامانه دیجیتال تعمیرات خودرو در ایران

OK

3 Inspect left actuator wire harness resistance

(a) Turn ENGINE START STOP switch to OFF.
(b) Disconnect the negative battery cable.
(c) Using a digital multimeter, measure resistance between ESP control module connector B-027 and left actuator connector B-097 according to value(s) in table below.

OK

Multimeter Connection	Condition	Standard Resistance
B-027(12)-B-097(2)	Ohms Range	≤ 0.3 Ω
B-027(13)-B-097(1)	Ohms Range	≤ 0.3 Ω

Result

Proceed to
OK
NG

NG → **Replace left actuator wire harness**

OK

4 Test left actuator

(a) Turn ENGINE START STOP switch to OFF.

WWW.DIGITALKHODRO.COM 021 62 99 92 92

WWW.DIGITALKHODRO.COM 021 62 99 92 92

(b) Disconnect left actuator wire harness connector at luggage compartment, using a digital multimeter, measure internal resistance of left actuator according to value(s) in table below.
Warning:
- The measurement result is minus multimeter error when measuring internal resistance of actuator.

Condition	Standard Resistance
Ohms Range	0.4 Ω - 0.9 Ω

Result

Proceed to
OK
NG

NG → **Replace left actuator**

OK

5	Reconfirm DTCs

(a) Turn ENGINE START STOP switch to ON.
(b) Use diagnostic tester (the latest software) to record and clear DTC stored in EPB system.
(c) Turn ENGINE START STOP switch to OFF and wait several seconds.
(d) Turn ENGINE START STOP switch to ON.
(e) Use diagnostic tester (the latest software) to reread DTC in EPB system.
Result

Proceed to
OK
NG

OK → **System operates normally**

NG → **Replace ESP control module**

شرکت دیجیتال خودرو پرهامه (مسئولیت محدود)
اولین سامانه دیجیتال تعمیرکاران خودرو در ایران

WWW.DIGITALKHODRO.COM 021 62 99 92 92

WWW.DIGITALKHODRO.COM 021 62 99 92 92

DTC	C1800-72	Left Actuator

DTC	C1801-72	Right Actuator

Description

EPB software detects that left motor is performing releasing for a certain time, but cannot return to target position

DTC	DTC Definition	DTC Detection Condition	Possible Cause	Malfunction Condition	Disabled Function
C1800-72	Left Actuator	ENGINE START STOP switch is in ON	• Left actuator internal mechanical malfunction, cannot release normally	• EPB malfunction light comes on • Left actuator cannot release parking brake normally	• Dynamic park • Left actuator parking function • Left actuator releasing function
C1801-72	Right Actuator				

Caution:

When performing circuit diagram and test, always refer to the circuit diagram for specific circuit and component information.

Procedure

1	Inspect if left actuator and caliper are installed properly

(a) Turn ENGINE START STOP switch to OFF.
(b) Disconnect the negative battery cable.
(c) Disconnect the left actuator wire harness connector.
(d) Inspect if the left actuator and caliper are installed properly.

Result

Proceed to
OK
NG

NG → **Repair or replace left actuator and caliper**

OK

2	Inspect left actuator internal for foreign matter

(a) Turn ENGINE START STOP switch to OFF.
(b) Disconnect the negative battery cable.
(c) Disconnect the left actuator wire harness connector.
(d) Remove the left actuator.
(e) Inspect left actuator internal for foreign matter, which cause the motor rotary resistance too high and cannot complete release operation normally.

Result

Proceed to
OK
NG

NG → **Clear up the foreign matter in left actuator**

WWW.DIGITALKHODRO.COM 021 62 99 92 92

WWW.DIGITALKHODRO.COM 021 62 99 92 92

OK

3	Test left actuator

(a) Turn ENGINE START STOP switch to OFF.
(b) Disconnect left actuator wire harness connector at luggage compartment, using a digital multimeter, measure internal resistance of left actuator according to value(s) in table below.
Warning:
- The measurement result is minus multimeter error when measuring internal resistance of actuator.

Condition	Standard Resistance
Ohms Range	0.4 Ω - 0.9 Ω

Result

Proceed to
OK
NG

NG → **Replace left actuator**

OK

4	Reconfirm DTCs

(a) Turn ENGINE START STOP switch to ON.
(b) Use diagnostic tester (the latest software) to record and clear DTC stored in EPB system.
(c) Turn ENGINE START STOP switch to OFF and wait several seconds.
(d) Turn ENGINE START STOP switch to ON.
(e) Use diagnostic tester (the latest software) to reread DTC in EPB system.
Result

Proceed to
OK
NG

OK → **System operates normally**

NG → **Replace ESP control module**

WWW.DIGITALKHODRO.COM 021 62 99 92 92

WWW.DIGITALKHODRO.COM 021 62 99 92 92

DTC	C1800-91	Left Actuator

DTC	C1801-91	Right Actuator

Description

EPB software detects that internal resistance is abnormal when motor starts.

DTC	DTC Definition	DTC Detection Condition	Possible Cause	Malfunction Condition	Disabled Function
C1800-91	Left Actuator	ENGINE START STOP switch is in ON	• Actuator wire harness or connector resistance is too big • Actuator internal motor resistance is abnormal	• EPB malfunction light comes on • Parking / releasing function cannot be performed by pulling up / pressing down the switch.	• Dynamic park • Actuator parking function • Actuator releasing function
C1801-91	Right Actuator				

Caution:

When performing circuit diagnosis and test, always refer to the circuit diagram for specific circuit and component information.

Procedure

1	Inspect if it is caused by incomplete left actuator wire harness

(a) Turn ENGINE START STOP switch to OFF.
(b) Disconnect the negative battery cable.
(c) Disconnect the left actuator wire harness connector.
(d) Inspect if it is caused by incomplete left actuator wire harness (splicing, damage, deterioration, etc.), which lead to big resistance of left wire harness, parking and releasing operation cannot be completed normally.

Result

Proceed to
OK
NG

NG → **Repair or replace left actuator wire harness**

OK

2	Test left actuator

(a) Turn ENGINE START STOP switch to OFF.
(b) Disconnect left actuator wire harness connector at luggage compartment, using a digital multimeter, measure internal resistance of left actuator according to value(s) in table below.

Warning:

- The measurement result is minus multimeter error when measuring internal resistance of actuator.

Condition	Standard Resistance
Ohms Range	0.4 Ω - 0.9 Ω

WWW.DIGITALKHODRO.COM 021 62 99 92 92

WWW.DIGITALKHODRO.COM 021 62 99 92 92

Result

Proceed to
OK
NG

NG → **Replace left actuator**

OK

3	Reconfirm DTCs

(a) Turn ENGINE START STOP switch to ON.
(b) Use diagnostic tester (the latest software) to record and clear DTC stored in EPB system.
(c) Turn ENGINE START STOP switch to OFF and wait several seconds.
(d) Turn ENGINE START STOP switch to ON.
(e) Use diagnostic tester (the latest software) to reread DTC in EPB system.

Result

Proceed to
OK
NG

OK → **System operates normally**

NG → **Replace ESP control module**

شرکت دیجیتال خودرو سامانه (مسئولیت محدود)
اولین سامانه دیجیتال تعمیرکاران خودرو در ایران

WWW.DIGITALKHODRO.COM 021 62 99 92 92

WWW.DIGITALKHODRO.COM 021 62 99 92 92

DTC	C1800-92	Left Actuator

DTC	C1801-92	Right Actuator

Description

EPB software detects that resistance is too large when motor idles.

DTC	DTC Definition	DTC Detection Condition	Possible Cause	Malfunction Condition	Disabled Function
C1800-92	Left Actuator	ENGINE START STOP switch is in ON	• Actuator mechanical malfunction (such as foreign matter inside)	• EPB malfunction light comes on • Actuator cannot perform parking operation by pulling up switch	• Dynamic park • Actuator parking function • Actuator releasing function
C1801-92	Right Actuator				

Caution:

When performing circuit diagnosis and test, always refer to the circuit diagram for specific circuit and component information.

Procedure

1	Test left actuator

(a) Turn ENGINE START STOP switch to OFF.
(b) Disconnect the negative battery cable.
(c) Disconnect the left actuator wire harness connector.
(d) Replace actuator with a new one and test again, confirm if it is caused by actuator internal mechanical malfunction.

Result

Proceed to
OK
NG

NG → **Replace left actuator**

OK

2	Reconfirm DTCs

(a) Turn ENGINE START STOP switch to ON.
(b) Use diagnostic tester (the latest software) to record and clear DTC stored in EPB system.
(c) Turn ENGINE START STOP switch to OFF and wait several seconds.
(d) Turn ENGINE START STOP switch to ON.
(e) Use diagnostic tester (the latest software) to reread DTC in EPB system.

OK

No same DTC is output

Result

Proceed to
OK
NG

WWW.DIGITALKHODRO.COM 021 62 99 92 92

WWW.DIGITALKHODRO.COM
021 62 99 92 92

OK	System operates normally
NG	Replace ESP control module

دیجیتال خودرو
شرکت دیجیتال خودرو سامانه (مسئولیت محدود)
اولین سامانه دیجیتال تعمیرکاران خودرو در ایران

WWW.DIGITALKHODRO.COM
021 62 99 92 92

WWW.DIGITALKHODRO.COM 021 62 99 92 92

DTC	C1800-97	Left Actuator

DTC	C1801-97	Right Actuator

Circuit Diagram

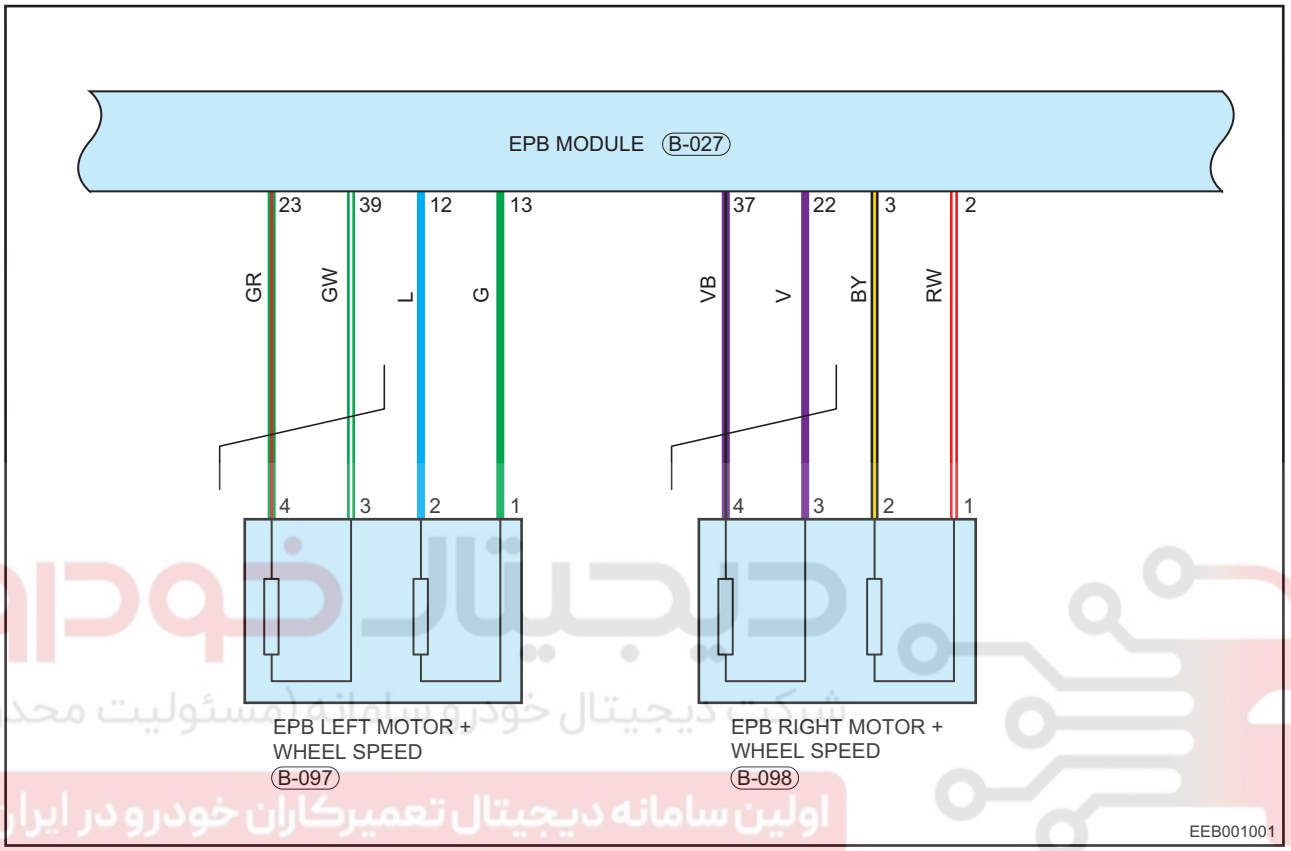

Description

EPB software detects that motor current and voltage signal is abnormal

DTC	DTC Definition	DTC Detection Condition	Possible Cause	Malfunction Condition	Disabled Function
C1800-97	Left Actuator	ENGINE START STOP switch is in ON	• Actuator wire harness circuit open • Actuator or wire harness circuit short • Manual parking release via switch operation frequency is too high	• EPB malfunction light comes on • Actuator cannot perform parking / releasing function by pulling up / pressing down switch.	• All functions of actuator are invalid • Dynamic park
C1801-97	Right Actuator				

Caution:

When performing circuit diagnosis and test, always refer to the circuit diagram for specific circuit and component information.

Procedure

1	Inspect if left actuator and caliper are installed properly

(a) Turn ENGINE START STOP switch to OFF.

WWW.DIGITALKHODRO.COM 021 62 99 92 92

WWW.DIGITALKHODRO.COM 021 62 99 92 92

(b) Disconnect the negative battery cable.
(c) Disconnect the left actuator wire harness connector.
(d) Inspect if the left actuator and caliper are installed properly.

Result

Proceed to
OK
NG

NG → **Reinstall and adjust left actuator and caliper**

OK

2	Inspect if the left actuator wire harness and connector are in good condition

(a) Turn ENGINE START STOP switch to OFF.
(b) Disconnect the negative battery cable.
(c) Disconnect the left actuator wire harness connector.
(d) Inspect if the left actuator wire harness and connector are in good condition.

Result

Proceed to
OK
NG

NG → **Repair or replace left actuator wire harness and connector**

OK

3	Inspect left actuator wire harness and connector for short circuit

(a) Turn ENGINE START STOP switch to OFF.
(b) Disconnect the negative battery cable.
(c) Disconnect ESP control module connector B-027 and left actuator connector B-097.
(d) Using a digital multimeter, measure and inspect if left actuator wire harness and connector are short according to value(s) in table below.

OK

Multimeter Connection	Condition	Specified Condition
B-027 (13) - B-097 (1)	Ohms Range	≤ 1 Ω
B-027 (12) - B-097 (2)	Ohms Range	≤ 1 Ω
B-027 (13) - Body ground	Ohms Range	∞
B-027 (12) - Body ground	Ohms Range	∞

Result

Proceed to
OK
NG

WWW.DIGITALKHODRO.COM 021 62 99 92 92

WWW.DIGITALKHODRO.COM 021 62 99 92 92

NG → **Repair or replace left actuator wire harness**

OK

4	Test left actuator

(a) Turn ENGINE START STOP switch to OFF.
(b) Disconnect left actuator wire harness connector at luggage compartment, using a digital multimeter, measure internal resistance of left actuator according to value(s) in table below.

Warning:

- The measurement result is minus multimeter error when measuring internal resistance of actuator.

Condition	Standard Resistance
Ohms Range	0.4 Ω - 0.9 Ω

Result

Proceed to
OK
NG

NG → **Replace left actuator**

OK

5	Reconfirm DTCs

(a) Turn ENGINE START STOP switch to ON.
(b) Use diagnostic tester (the latest software) to record and clear DTC stored in EPB system.
(c) Turn ENGINE START STOP switch to OFF and wait several seconds.
(d) Turn ENGINE START STOP switch to ON.
(e) Use diagnostic tester (the latest software) to reread DTC in EPB system.

Result

Proceed to
OK
NG

OK → **System operates normally**

NG → **Replace ESP control module**

WWW.DIGITALKHODRO.COM 021 62 99 92 92

WWW.DIGITALKHODRO.COM 021 62 99 92 92

DTC	C1802-17	Supply Voltage

Description

Battery voltage exceeds the set threshold voltage and duration is too long.

DTC	DTC Definition	DTC Detection Condition	Possible Cause	Malfunction Condition	Disabled Function
C1802-17	Supply Voltage	ENGINE START STOP switch is in ON	• External power supply voltage is too high or battery is damaged • ECU internal fault	• EPB malfunction light comes on • EPB does not response to clamping and releasing request	• All functions of EPB are invalid

Caution:

When performing circuit diagnosis and test, always refer to the circuit diagram for specific circuit and component information.

Procedure

1	Measure vehicle battery voltage

(a) Start vehicle and idle.
(b) Measure if battery voltage is higher than 16.5V.

Result

Proceed to
OK
NG

NG → **Check and repair charging system**

OK

2	Reconfirm DTCs

(a) Turn ENGINE START STOP switch to ON.
(b) Use diagnostic tester (the latest software) to record and clear DTC stored in EPB system.
(c) Turn ENGINE START STOP switch to OFF and wait several seconds.
(d) Turn ENGINE START STOP switch to ON.
(e) Use diagnostic tester (the latest software) to reread DTC in EPB system.

Result

Proceed to
OK
NG

OK → **System operates normally**

NG → **Replace ESP control module**

WWW.DIGITALKHODRO.COM 021 62 99 92 92

WWW.DIGITALKHODRO.COM 021 62 99 92 92

DTC	C1802-16	Supply Voltage

Description

Battery voltage is lower than the set threshold voltage and duration is too long.

DTC	DTC Definition	DTC Detection Condition	Possible Cause	Malfunction Condition	Disabled Function
C1802-16	Supply Voltage	ENGINE START STOP switch is in ON	• Battery voltage is too low or battery is damaged • Connection line is in poor contact with positive/ negative of battery • ECU internal fault	• EPB malfunction light comes on • EPB does not response to clamping and releasing request	• All functions of EPB are invalid

Caution:

When performing circuit diagnosis and test, always refer to the circuit diagram for specific circuit and component information.

Procedure

1	Measure vehicle battery voltage

(a) Measure if battery voltage is lower than 12V when vehicle is idling and engine stalls.

Result

Proceed to
OK
NG

NG → **Check and repair charging system or replace battery**

OK

2	Check EPB power source connection line

(a) Turn ENGINE START STOP switch to OFF.
(b) Disconnect the negative battery cable.
(c) Check if EPB power source connection line is in poor contact with positive/negative of battery, or resistance is too big due to large area oxidation on contact surface.

Result

Proceed to
OK
NG

NG → **Check and repair charging system or replace battery**

OK

WWW.DIGITALKHODRO.COM 021 62 99 92 92

WWW.DIGITALKHODRO.COM 021 62 99 92 92

3	Reconfirm DTCs

(a) Turn ENGINE START STOP switch to ON.
(b) Use diagnostic tester (the latest software) to record and clear DTC stored in EPB system.
(c) Turn ENGINE START STOP switch to OFF and wait several seconds.
(d) Turn ENGINE START STOP switch to ON.
(e) Use diagnostic tester (the latest software) to reread DTC in EPB system.

Result

Proceed to
OK
NG

OK	**System operates normally**
NG	**Replace ESP control module**

دیجیتال خودرو
شرکت دیجیتال خودرو سامانه (مسئولیت محدود)
اولین سامانه دیجیتال تعمیرکاران خودرو در ایران

WWW.DIGITALKHODRO.COM 021 62 99 92 92

WWW.DIGITALKHODRO.COM 021 62 99 92 92

DTC	C1803-95	Assembly Test

Description

EPB assembly test incomplete mark position is modified.

DTC	DTC Definition	DTC Detection Condition	Possible Cause	Malfunction Condition	Disabled Function
C1803-95	Assembly Test	ENGINE START STOP switch is in ON	• Assembly test is not performed after completion of EPB • Power is not turned off normally after performing assembly test	• EPB malfunction light comes on • "Assembly Test is not performed" malfunction is displayed when reading DTC.	• None

Caution:

When performing circuit diagnosis and test, always refer to the circuit diagram for specific circuit and component information.

Procedure

1	Perform assembly calibration normally by diagnostic tester

(a) Assembly calibration is not performed after completion of EPB, after performing assembly calibration normally by diagnostic tester, turn off power normally.

(b) Turn power on again after EPB sleeps, EPB malfunction light goes off, there is no current malfunction "Assembly Test".

شرکت دیجیتال خودرو سامانه (مسئولیت محدود)
اولین سامانه دیجیتال تعمیرکاران خودرو در ایران

2	Reconfirm DTCs

(a) Turn ENGINE START STOP switch to ON.

(b) Use diagnostic tester (the latest software) to record and clear DTC stored in EPB system.

(c) Turn ENGINE START STOP switch to OFF and wait several seconds.

(d) Turn ENGINE START STOP switch to ON.

(e) Use diagnostic tester (the latest software) to reread DTC in EPB system.

OK

No same DTC is output

WWW.DIGITALKHODRO.COM 021 62 99 92 92

WWW.DIGITALKHODRO.COM 021 62 99 92 92

DTC	C1804-53	Maintenance Mode

Description

EPB maintenance mode mark position is modified

DTC	DTC Definition	DTC Detection Condition	Possible Cause	Malfunction Condition	Disabled Function
C1804-53	Maintenance Mode	ENGINE START STOP switch is in ON	• Enter maintenance mode due to replacement of EPB calipers or friction linings, and the maintenance mode has not been exited by diagnostic tester.	• EPB malfunction light comes on; • "EPB Maintenance Mode" is displayed when reading DTC by diagnostic tester. • Motor on both sides do not respond to switch requests	• All functions except diagnostic function (exit maintenance mode) are invalid

Caution:

When performing circuit diagnosis and test, always refer to the circuit diagram for specific circuit and component information.

Procedure

1	**After maintenance is completed, maintenance mode function exit will be performed through the diagnostic tester**

(a) In EPB maintenance state, after maintenance is completed, maintenance mode function exit will be performed through the diagnostic tester.

(b) After the normal execution of maintenance mode exit request, the vehicle power is turned off normally (IGN off).

(c) Turn power on again after ESP sleeps, EPB malfunction light goes off (no other faults in system).

2	**Reconfirm DTCs**

(a) Turn ENGINE START STOP switch to ON.

(b) Use diagnostic tester (the latest software) to record and clear DTC stored in EPB system.

(c) Turn ENGINE START STOP switch to OFF and wait several seconds.

(d) Turn ENGINE START STOP switch to ON.

(e) Use diagnostic tester (the latest software) to reread DTC in EPB system.

OK

No same DTC is output

WWW.DIGITALKHODRO.COM 021 62 99 92 92

WWW.DIGITALKHODRO.COM 021 62 99 92 92

DTC	C182B-62	APB Act_Plausibility

Description
Caution:
When performing circuit diagnosis and test, always refer to the circuit diagram for specific circuit and component information.
Procedure

1	Perform Active Test using diagnostic tester

(a) Clamp and release left and right rear wheel brake caliper.
Result

Proceed to
OK
NG

OK → **End**

NG

2	Check wire harness and connector

(a) Turn ENGINE START STOP switch to OFF.
(b) Disconnect the negative battery cable.
(c) Disconnect the left actuator wire harness and connector.
(d) Check if wire harnesses are worn, pierced, pinched or partially broken.
(e) Check for broken, bent, protruded or corroded terminals.
(f) Check if terminal contact pins of related connectors are in good condition.
Result

Proceed to
OK
NG

NG → **Repair or replace related wire harness and connector**

OK

3	Check left caliper motor

(a) Turn ENGINE START STOP switch to OFF.
(b) Disconnect the negative battery cable.
(c) Disconnect the left actuator connector, replace actuator and test.
OK
Motor rotates normally
Result

Proceed to
OK

WWW.DIGITALKHODRO.COM 021 62 99 92 92

WWW.DIGITALKHODRO.COM 021 62 99 92 92

Proceed to
NG

NG → **Replace left parking brake actuator**

OK

4	Reconfirm DTCs

(a) Turn ENGINE START STOP switch to ON.
(b) Use diagnostic tester (the latest software) to record and clear DTC stored in EPB system.
(c) Turn ENGINE START STOP switch to OFF and wait several seconds.
(d) Turn ENGINE START STOP switch to ON.
(e) Use diagnostic tester (the latest software) to reread DTC in EPB system.

Result

Proceed to
OK
NG

OK → **Same DTC is not output**

NG → **Replace ABS/ESP control module**

شرکت دیجیتال خودرو سامانه (مسئولیت محدود)
اولین سامانه دیجیتال تعمیرکاران خودرو در ایران

WWW.DIGITALKHODRO.COM 021 62 99 92 92

WWW.DIGITALKHODRO.COM 021 62 99 92 92

DTC	C1824-01	APBActL_ElectricalFailure

DTC	C1822-00	APBActL_Failure

DTC	C1824-1E	APBActL_ShuntOnLineOrECU

Circuit Diagram

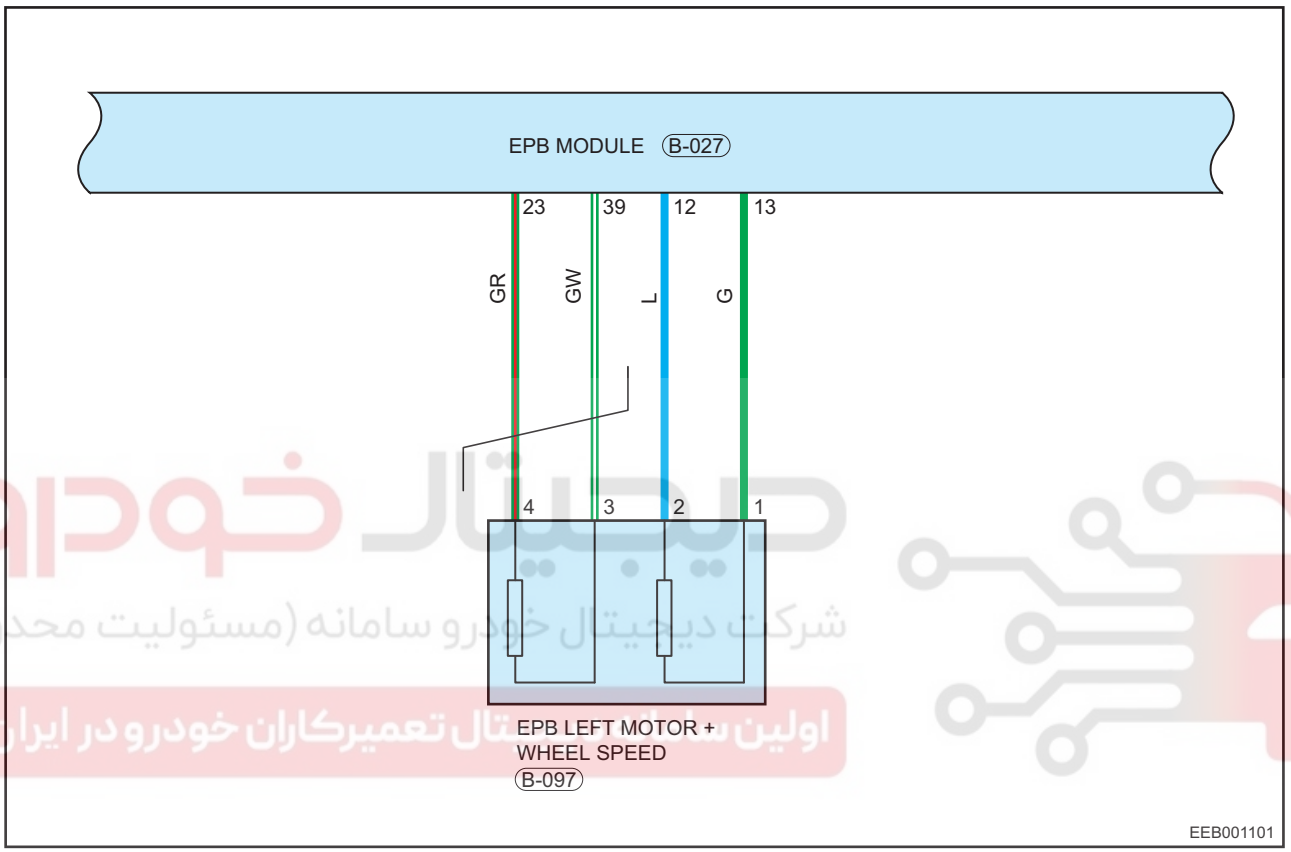

Caution:
When performing electrical equipment diagnosis and test, always refer to circuit diagram for related circuit and component information.

Procedure

1	Check wire harness and connector

(a) Turn ENGINE START STOP switch to OFF.
(b) Disconnect the negative battery cable.
(c) Disconnect the left actuator wire harness and connector.
(d) Check if wire harnesses are worn, pierced, pinched or partially broken.
(e) Check for broken, bent, protruded or corroded terminals.
(f) Check if terminal contact pins of related connectors are in good condition.

Result

Proceed to
OK
NG

WWW.DIGITALKHODRO.COM 021 62 99 92 92

WWW.DIGITALKHODRO.COM 021 62 99 92 92

NG → **Repair or replace related wire harness and connector**

OK

2 Check left caliper motor

(a) Turn ENGINE START STOP switch to OFF.
(b) Disconnect the negative battery cable.
(c) Disconnect the left actuator connector, replace actuator and test.

OK

Motor rotates normally

Result

Proceed to
OK
NG

NG → **Replace left parking brake actuator**

OK

3 Check wire harness and connector for continuity

(a) Turn ENGINE START STOP switch to OFF.
(b) Disconnect the negative battery cable.
(c) Using ohm band of multimeter, check for continuity between terminal 13 of B-027 and terminal 1 of B-097.

OK

Multimeter Connection	Condition	Specified Condition
B-027 (13) - B-097 (1)	Always	≤ 1 Ω

(d) Using ohm band of multimeter, check for continuity between terminal 12 of B-027 and terminal 2 of B-097.

OK

Multimeter Connection	Condition	Specified Condition
B-027 (12) - B-097 (2)	Always	≤ 1 Ω

(e) Using a digital multimeter, check if left caliper motor connector is short to ground according to the table below.

OK

Multimeter Connection	Condition	Specified Condition
B-097 (1) - Body ground	Always	∞
B-097 (2) - Body ground	Always	∞

(f) Disconnect the negative battery cable.
(g) Turn ENGINE START STOP switch to ON.
(h) Using a digital multimeter, check if left caliper motor connector is short to power source according to the table below.

WWW.DIGITALKHODRO.COM 021 62 99 92 92

WWW.DIGITALKHODRO.COM 021 62 99 92 92

OK

Multimeter Connection	Condition	Specified Condition
B-097 (1) - Body ground	ENGINE START STOP switch is in ON	Approx. 0 V
B-097 (2) - Body ground	ENGINE START STOP switch is in ON	Approx. 0 V

Result

Proceed to
OK
NG

NG → **Repair or replace wire harness and connector between left caliper motor connector and ABS/ESP control module assembly**

OK

4	Reconfirm DTCs

(a) Turn ENGINE START STOP switch to ON.
(b) Use diagnostic tester (the latest software) to record and clear DTC stored in EPB system.
(c) Turn ENGINE START STOP switch to OFF and wait several seconds.
(d) Turn ENGINE START STOP switch to ON.
(e) Use diagnostic tester (the latest software) to reread DTC in EPB system.

Result

Proceed to
OK
NG

OK → **System operates normally**

NG → **Replace left parking brake actuator**

شرکت دیجیتال خودرو سامانه (مسئولیت محدود)
اولین سامانه دیجیتال تعمیرکاران خودرو در ایران

WWW.DIGITALKHODRO.COM 021 62 99 92 92

WWW.DIGITALKHODRO.COM 021 62 99 92 92

DTC	C1825-01	APBActR_ElectricalFailure

DTC	C1821-00	APBActR_Failure

DTC	C1825-1E	APBActR_ShuntOnLineOrECU

Circuit Diagram

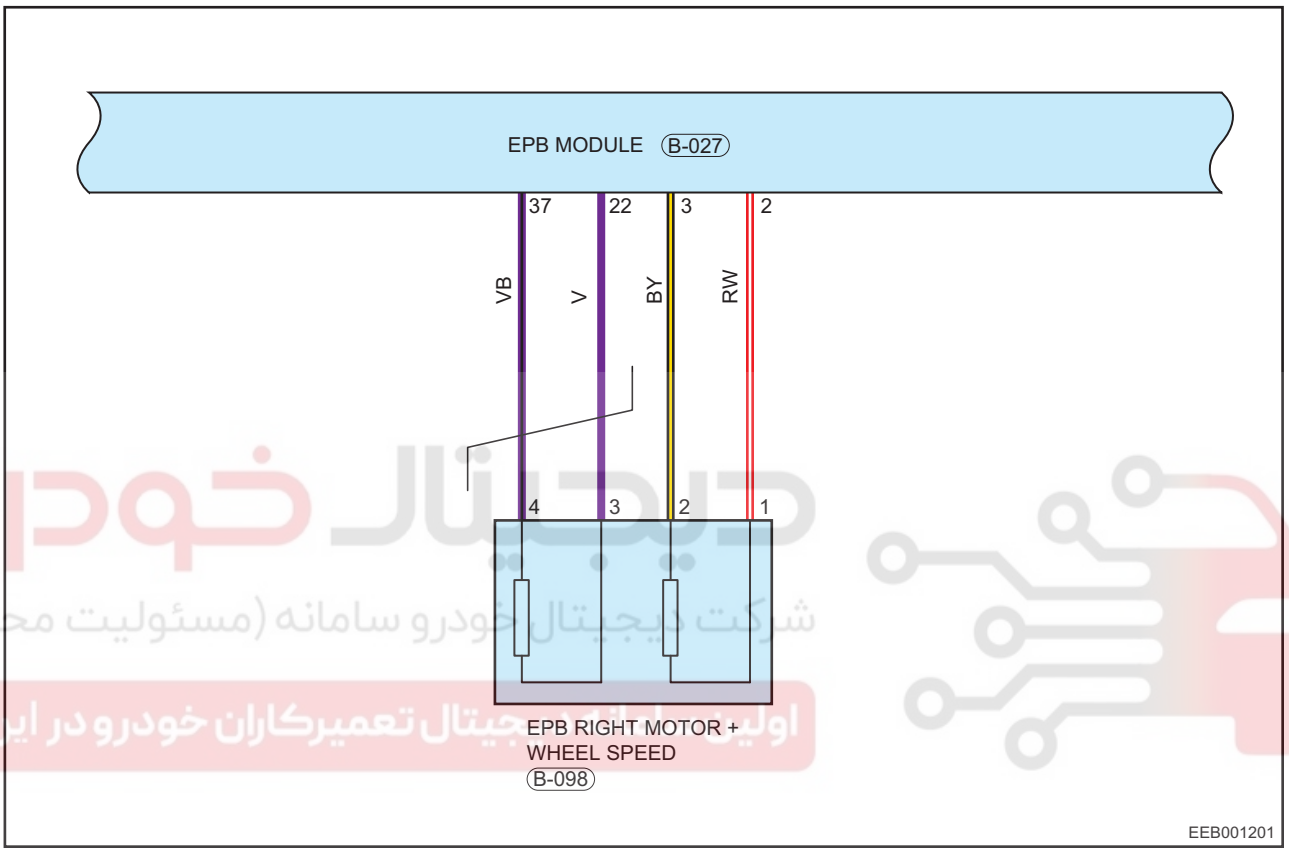

Caution:
When performing electrical equipment diagnosis and test, always refer to circuit diagram for related circuit and component information.

Procedure

1	Check wire harness and connector

(a) Turn ENGINE START STOP switch to OFF.
(b) Disconnect the negative battery cable.
(c) Disconnect the right actuator wire harness and connector.
(d) Check if wire harnesses are worn, pierced, pinched or partially broken.
(e) Check for broken, bent, protruded or corroded terminals.
(f) Check if terminal contact pins of related connectors are in good condition.

Result

Proceed to
OK
NG

WWW.DIGITALKHODRO.COM 021 62 99 92 92

WWW.DIGITALKHODRO.COM 021 62 99 92 92

NG → **Repair or replace related wire harness and connector**

OK

2	Check right caliper motor

(a) Turn ENGINE START STOP switch to OFF.
(b) Disconnect the negative battery cable.
(c) Disconnect the right actuator connector, replace actuator and test.

OK

Motor rotates normally

Result

Proceed to
OK
NG

NG → **Replace right parking brake actuator**

OK

3	Check wire harness and connector for continuity

(a) Turn ENGINE START STOP switch to OFF.
(b) Disconnect the negative battery cable.
(c) Using ohm band of multimeter, check for continuity between terminal 2 of B-027 and terminal 1 of B-098.

OK

Multimeter Connection	Condition	Specified Condition
B-027 (2) - B-098 (1)	Always	≤ 1 Ω

(d) Using ohm band of multimeter, check for continuity between terminal 3 of B-027 and terminal 2 of B-098.

OK

Multimeter Connection	Condition	Specified Condition
B-027 (3) - B-098 (2)	Always	≤ 1 Ω

(e) Using a digital multimeter, check if right caliper motor connector is short to ground according to the table below.

OK

Multimeter Connection	Condition	Specified Condition
B-098 (1) - Body ground	Always	∞
B-098 (2) - Body ground	Always	∞

(f) Disconnect the negative battery cable.
(g) Turn ENGINE START STOP switch to ON.
(h) Using a digital multimeter, check if right caliper motor connector is short to power source according to the table below.

WWW.DIGITALKHODRO.COM 021 62 99 92 92

WWW.DIGITALKHODRO.COM 021 62 99 92 92

OK

Multimeter Connection	Condition	Specified Condition
B-098 (1) - Body ground	ENGINE START STOP switch is in ON	Approx. 0 V
B-098 (2) - Body ground	ENGINE START STOP switch is in ON	Approx. 0 V

Result

Proceed to
OK
NG

NG → **Repair or replace wire harness and connector between right caliper motor connector and ABS/ESP control module assembly**

OK

4	Reconfirm DTCs

(a) Turn ENGINE START STOP switch to ON.
(b) Use diagnostic tester (the latest software) to record and clear DTC stored in EPB system.
(c) Turn ENGINE START STOP switch to OFF and wait several seconds.
(d) Turn ENGINE START STOP switch to ON.
(e) Use diagnostic tester (the latest software) to reread DTC in EPB system.

Result

Proceed to
OK
NG

OK → **System operates normally**

NG → **Replace right parking brake actuator**

WWW.DIGITALKHODRO.COM 021 62 99 92 92

WWW.DIGITALKHODRO.COM 021 62 99 92 92

DTC	C1830-00	APBActR_CAT

DTC	C1831-00	APBActR_CAT

Caution:
When performing electrical equipment diagnosis and test, always refer to circuit diagram for related circuit and component information.

1	Check wire harness and connector for continuity

(a) Turn ENGINE START STOP switch to OFF.
(b) Disconnect the negative battery cable.
(c) Check continuity of wire harness between ABS/ESP and actuator using resistance gear of multimeter.

Result

Proceed to
OK
NG

NG → **Repair or replace wire harness and connector between caliper motor connector and ABS/ESP control module assembly**

OK

شرکت دیجیتال خودرو سامانه (مسئولیت محدود)
اولین سامانه دیجیتال تعمیرات خودرو در ایران

2	Check caliper actuator motor

(a) Turn ENGINE START STOP switch to OFF.
(b) Disconnect the negative battery cable.
(c) Disconnect the right actuator connector, replace actuator and test.

OK
Motor rotates normally

Result

Proceed to
OK
NG

NG → **Replace parking brake actuator**

OK

WWW.DIGITALKHODRO.COM 021 62 99 92 92

WWW.DIGITALKHODRO.COM 021 62 99 92 92

3	Reconfirm DTCs

(a) Turn ENGINE START STOP switch to ON.
(b) Use diagnostic tester (the latest software) to record and clear DTC stored in EPB system.
(c) Turn ENGINE START STOP switch to OFF and wait several seconds.
(d) Turn ENGINE START STOP switch to ON.
(e) Use diagnostic tester (the latest software) to reread DTC in EPB system.

Result

Proceed to
OK
NG

OK	**System operates normally**
NG	**Replace ESP/ABS control module**

دیجیتال خودرو
شرکت دیجیتال خودرو سامانه (مسئولیت محدود)
اولین سامانه دیجیتال تعمیرکاران خودرو در ایران

WWW.DIGITALKHODRO.COM 021 62 99 92 92

WWW.DIGITALKHODRO.COM 021 62 99 92 92

DTC	C1833-00	APBActR_UnintendedRun

DTC	C1832-00	APBActL_UnintendedRun

Circuit Diagram

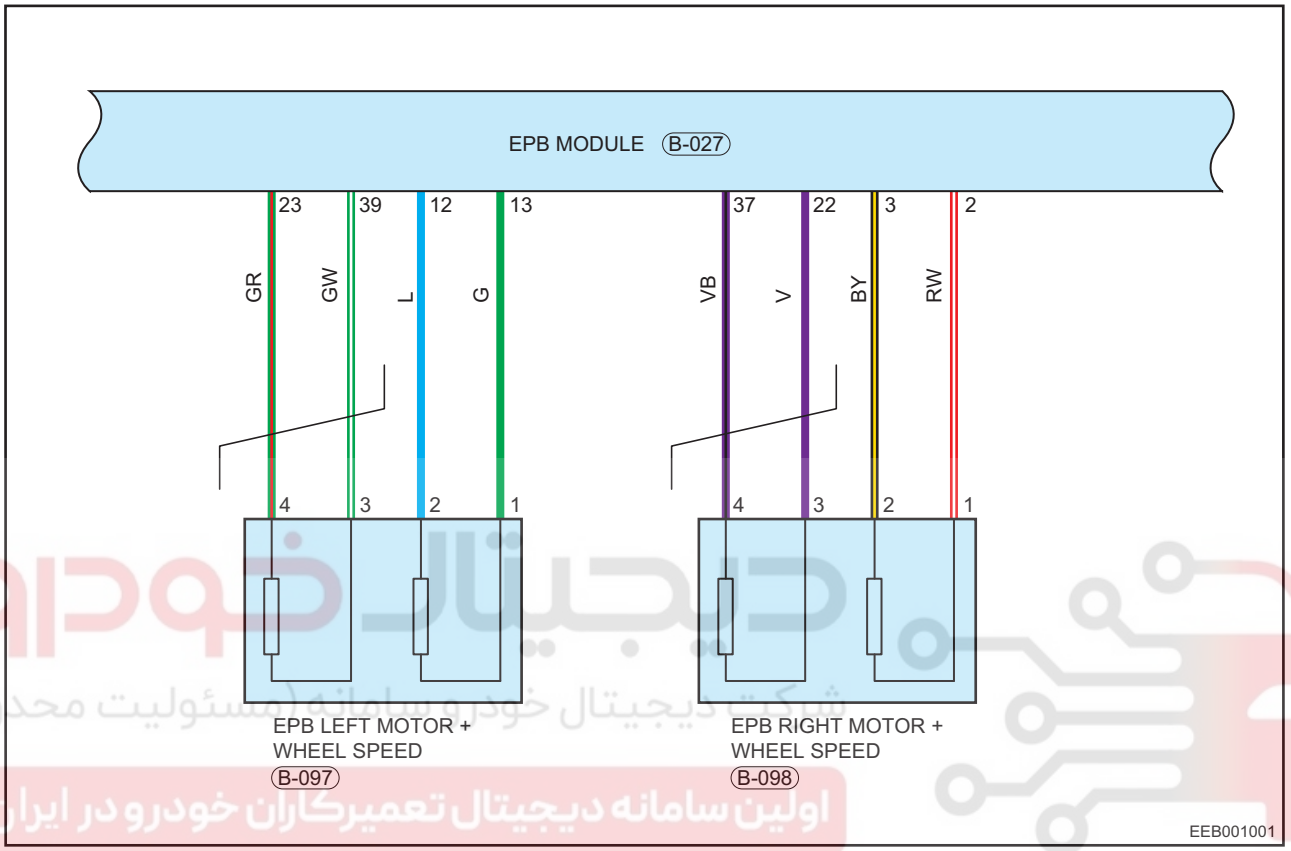

Hint:
The right actuator check shall prevail
Caution:
When performing electrical equipment diagnosis and test, always refer to circuit diagram for related circuit and component information.

1	Check if right actuator is short to power source

(a) Connect the negative battery cable.
(b) Turn ENGINE START STOP switch to ON.
(c) Using a digital multimeter, check if right caliper motor connector is short to power source according to the table below.

OK

Multimeter Connection	Condition	Specified Condition
B-098 (1) - Body ground	ENGINE START STOP switch is in ON	Approx. 0 V
B-098 (2) - Body ground	ENGINE START STOP switch is in ON	Approx. 0 V

WWW.DIGITALKHODRO.COM 021 62 99 92 92

WWW.DIGITALKHODRO.COM 021 62 99 92 92

Result

Proceed to
OK
NG

NG → **Repair or replace wire harness and connector between right caliper motor connector and ABS/ESP control module assembly**

OK

2	Reconfirm DTCs

(a) Turn ENGINE START STOP switch to ON.
(b) Use diagnostic tester (the latest software) to record and clear DTC stored in EPB system.
(c) Turn ENGINE START STOP switch to OFF and wait several seconds.
(d) Turn ENGINE START STOP switch to ON.
(e) Use diagnostic tester (the latest software) to reread DTC in EPB system.

Result

Proceed to
OK
NG

OK → **System operates normally**

NG → **Replace ESP/ABS control module**

دیجیتال خودرو
شرکت دیجیتال خودرو سامانه (سهامی خاص)
اولین سامانه دیجیتال تعمیرکاران خودرو در ایران

WWW.DIGITALKHODRO.COM 021 62 99 92 92

WWW.DIGITALKHODRO.COM 021 62 99 92 92

DTC	C1826-01	APBActDriverGen_ElectricalFailure

Caution:
When performing electrical equipment diagnosis and test, always refer to circuit diagram for related circuit and component information.

1	Check actuator connector

(a) Turn ENGINE START STOP switch to OFF.
(b) Disconnect the negative battery cable.
(c) Check if actuator connector is installed firmly.
(d) Check if installing position of actuator connector is dirty.

Result

Proceed to
OK
NG

NG → **Install actuator connector correctly and firmly.**

OK

2	Perform Active Test using diagnostic tester

(a) Clamp and release left and right rear wheel brake caliper.

Result

Proceed to
OK
NG

OK → **End**

NG

3	Check caliper actuator motor

(a) Turn ENGINE START STOP switch to OFF.
(b) Disconnect the negative battery cable.
(c) Replace actuator and retest.

OK

Motor rotates normally

Result

Proceed to
OK
NG

NG → **Replace parking brake actuator**

WWW.DIGITALKHODRO.COM 021 62 99 92 92

WWW.DIGITALKHODRO.COM 021 62 99 92 92

OK

4	Reconfirm DTCs

(a) Turn ENGINE START STOP switch to ON.
(b) Use diagnostic tester (the latest software) to record and clear DTC stored in EPB system.
(c) Turn ENGINE START STOP switch to OFF and wait several seconds.
(d) Turn ENGINE START STOP switch to ON.
(e) Use diagnostic tester (the latest software) to reread DTC in EPB system.

Result

Proceed to
OK
NG

OK	System operates normally
NG	Replace ABS/ESP control module

دیجیتال خودرو
شرکت دیجیتال خودرو سامانه (مسئولیت محدود)
اولین سامانه دیجیتال تعمیرکاران خودرو در ایران

WWW.DIGITALKHODRO.COM 021 62 99 92 92

WWW.DIGITALKHODRO.COM 021 62 99 92 92

DTC	C1807-98	Disc Over Heat

Caution:
When performing electrical equipment diagnosis and test, always refer to circuit diagram for related circuit and component information.

1	Perform Active Test using diagnostic tester

(a) Clamp and release left and right rear wheel brake caliper.

Result

Proceed to
OK
NG

OK → **End**

NG

2	Check caliper actuator motor

(a) Turn ENGINE START STOP switch to OFF.
(b) Disconnect the negative battery cable.
(c) Replace actuator and retest.

OK

Motor rotates normally

Result

Proceed to
OK
NG

NG → **Replace parking brake actuator**

OK

3	Reconfirm DTCs

(a) Turn ENGINE START STOP switch to ON.
(b) Use diagnostic tester (the latest software) to record and clear DTC stored in EPB system.
(c) Turn ENGINE START STOP switch to OFF and wait several seconds.
(d) Turn ENGINE START STOP switch to ON.
(e) Use diagnostic tester (the latest software) to reread DTC in EPB system.

Result

Proceed to
OK
NG

OK → **System operates normally**

NG → **Replace ABS/ESP control module**

WWW.DIGITALKHODRO.COM 021 62 99 92 92

WWW.DIGITALKHODRO.COM 021 62 99 92 92

DTC	C1806-16	APB Button Under Voltage

Circuit Diagram

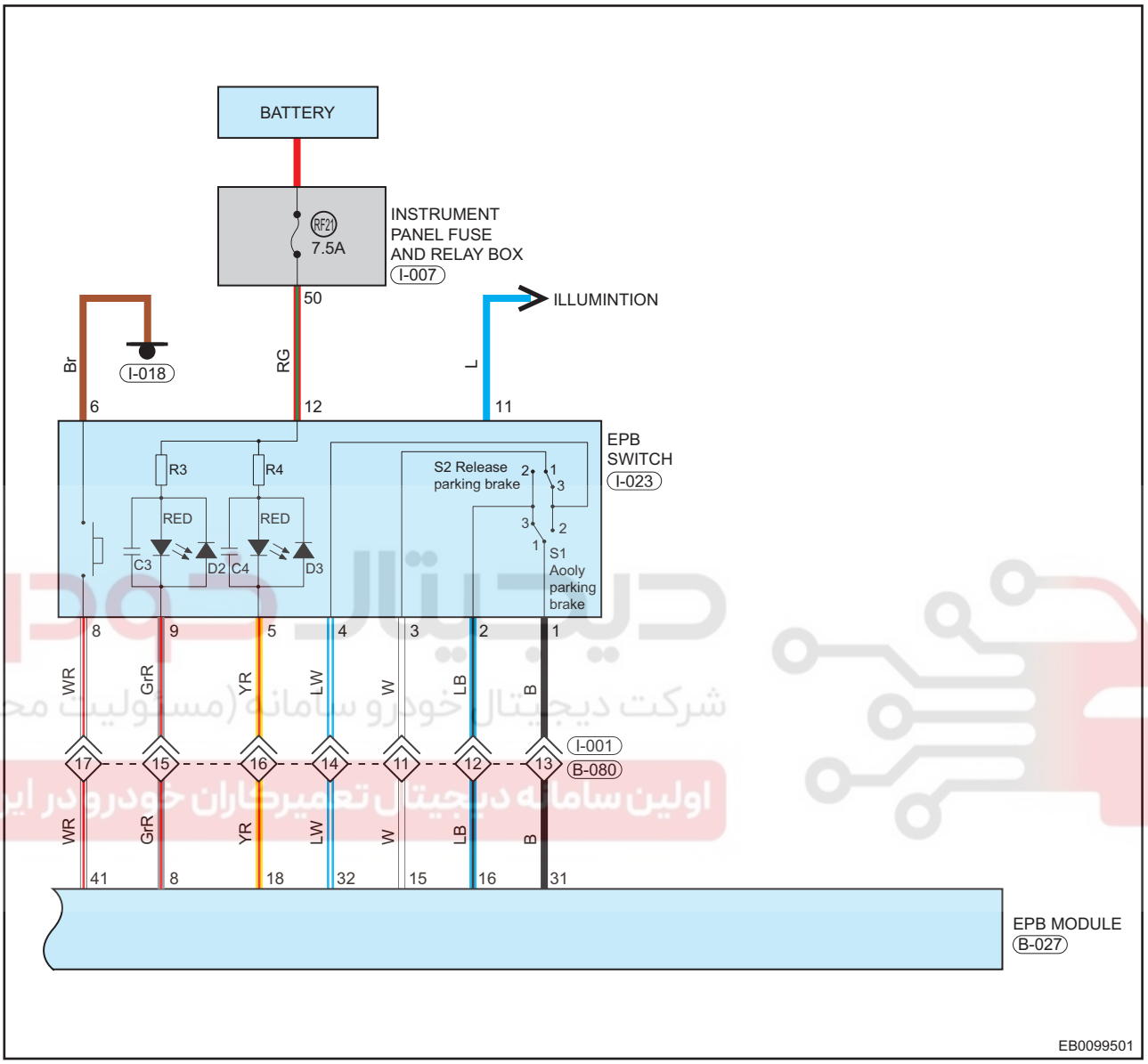

1	Check EPB switch

(a) Refer to inspection of EPB switch

Result

Proceed to
OK
NG

NG → **Replace EPB switch**

OK

23

WWW.DIGITALKHODRO.COM 021 62 99 92 92

WWW.DIGITALKHODRO.COM 021 62 99 92 92

2	Check the battery

(a) Using a digital multimeter, measure voltage between positive battery terminal and negative battery terminal.
(b) Battery voltage should be higher than 12 V.

Result

Proceed to
OK
NG

NG → **Check charging system**

OK

3	Check wire harness and connector for continuity

(a) Turn ENGINE START STOP switch to OFF.
(b) Disconnect the negative battery cable.
(c) Disconnect the connector.
(d) Using ohm band of multimeter, check for continuity between terminal 1 of I-023 and terminal 31 of B-027.

OK

Multimeter Connection	Condition	Specified Condition
I-023 (1) - B-027 (31)	Always	≤ 1 Ω

(e) Using ohm band of multimeter, check for continuity between I-023 (2) and B-027 (16).

OK

Multimeter Connection	Condition	Specified Condition
I-023(2)-B-027(16)	Always	≤ 1 Ω

(f) Using ohm band of multimeter, check for continuity between I-023 (3) and B-027(15).

OK

Multimeter Connection	Condition	Specified Condition
I-023(3)-B-027(15)	Always	≤ 1 Ω

(g) Using ohm band of multimeter, check for continuity between I-041 (4) and B-027 (32).

OK

Multimeter Connection	Condition	Specified Condition
I-023 (4) - B-027 (32)	Always	≤ 1 Ω

(h) Using ohm band of multimeter, check for continuity between I-023 (5) and B-027(18).

OK

Multimeter Connection	Condition	Specified Condition
I-023(5)-B-027(18)	Always	≤ 1 Ω

(i) Using ohm band of multimeter, check for continuity between I-023 (9) and B-027 (8).

OK

Multimeter Connection	Condition	Specified Condition
I-023 (9) - B-027 (8)	Always	≤ 1 Ω

WWW.DIGITALKHODRO.COM 021 62 99 92 92

WWW.DIGITALKHODRO.COM 021 62 99 92 92

(j) Using ohm band of multimeter, check for continuity between I-023 (8) and B-027(41).
OK

Multimeter Connection	Condition	Specified Condition
I-023(8)-B-027(41)	Always	≤ 1 Ω

(k) Using ohm band of multimeter, check for continuity between I-023 (6) and ground point I-018.
OK

Multimeter Connection	Condition	Specified Condition
I-023(6) - I–018	Always	≤ 1 Ω

Result

Proceed to
OK
NG

NG → **Repair or replace wire harness and connector between EPB switch and ABS/ ESP control module assembly**

OK

4 Reconfirm DTCs

(a) Turn ENGINE START STOP switch to ON.
(b) Use diagnostic tester (the latest software) to record and clear DTC stored in EPB system.
(c) Turn ENGINE START STOP switch to OFF and wait several seconds.
(d) Turn ENGINE START STOP switch to ON.
(e) Use diagnostic tester (the latest software) to reread DTC in EPB system.
Result

Proceed to
OK
NG

OK → **Same DTC is not output**

NG → **Replace ABS/ESP control module assembly**

WWW.DIGITALKHODRO.COM 021 62 99 92 92

WWW.DIGITALKHODRO.COM 021 62 99 92 92

DTC	C1823-00	APB Motor Enable Line Violation

Caution:
When performing electrical equipment diagnosis and test, always refer to circuit diagram for related circuit and component information.

1	Check actuator connector

(a) Turn ENGINE START STOP switch to OFF.
(b) Disconnect the negative battery cable.
(c) Disconnect actuator connector, check it for dirty, water, aging or loosening.

Result

Proceed to
OK
NG

NG → **Install, clean or replace connector correctly and firmly**

OK

2	Check wire harness and connector for continuity

(a) Turn ENGINE START STOP switch to OFF.
(b) Disconnect the negative battery cable.
(c) Check continuity of wire harness between ABS/ESP and actuator using resistance gear of multimeter.

Result

Proceed to
OK
NG

NG → **Repair or replace wire harness and connector between actuator motor and ABS/ESP control module assembly**

OK

3	Check actuator motor

(a) Disconnect the negative battery cable.
(b) Turn ENGINE START STOP switch to OFF.
(c) Replace actuator motor with a new one and retest.

Result

Proceed to
Next

WWW.DIGITALKHODRO.COM 021 62 99 92 92

WWW.DIGITALKHODRO.COM 021 62 99 92 92

Next

4	Reconfirm DTCs

(a) Turn ENGINE START STOP switch to ON.
(b) Use diagnostic tester (the latest software) to record and clear DTC stored in EPB system.
(c) Turn ENGINE START STOP switch to OFF and wait several seconds.
(d) Turn ENGINE START STOP switch to ON.
(e) Use diagnostic tester (the latest software) to reread DTC in EPB system.

Result

Proceed to
OK
NG

OK	Same DTC is not output
NG	Replace actuator motor

دیجیتال خودرو
شرکت دیجیتال خودرو سامانه (مسئولیت محدود)
اولین سامانه دیجیتال تعمیرکاران خودرو در ایران

WWW.DIGITALKHODRO.COM 021 62 99 92 92

WWW.DIGITALKHODRO.COM 021 62 99 92 92

ON-VEHICLE SERVICE

EPB System

On-vehicle Inspection

1. Inspect friction material thickness of brake discs on both sides visually, replace it when minimum value is less than 2 mm.
2. When brake disc is worn to limit state, there will be mechanical alarm, and the brake disc should be replaced.
3. It is necessary to replace 4 brake linings of left and right brake calipers when replacing brake linings.
4. If removed brake lining can be reused, it must be installed at original position when it is reinstalled.
5. During warranty period of brake lining, it is not possible to replace brake lining with different wear thickness. If friction material thickness is less than 2 mm in warranty period, brake lining should be replaced, and check brake caliper for dragging at the same time.
6. Check EPB wire harness for aging or damage, replace as necessary.

   Warning:
   - EPB system must be repaired by professional technicians who have trained and mastered maintenance skills and only use original parts for replacement.
   - Before perform a fault diagnosis of EPB system, it is necessary to confirm that vehicle CAN interface can be connected properly.
   - Note following when connecting EPB wire harness: Turn ENGINE START STOP switch off before disconnecting wire harness connector, make sure that connector is dry and clean and avoid any foreign material entering; Wire harness must be installed in place horizontally and vertically in order to avoid damaging connector.
   - If EPB motor fuse need to be replaced, make sure that it is exactly the same with original model, including shape and parameters, and ensure that connection is fully in place.

اولین سامانه دیجیتال تعمیرکاران خودرو در ایران

WWW.DIGITALKHODRO.COM 021 62 99 92 92

WWW.DIGITALKHODRO.COM 021 62 99 92 92

Integrated Caliper Motor

Removal

Warning/Caution/Hint

Hint:

- Use same procedures for right and left sides.
- Procedures listed below are for left side.

Caution:

- Be sure to wear safety equipment to prevent accidents, when removing integrated caliper motor.
- Remove integrated caliper motor without damaging motor seal ring and replace it when necessary.
- When removing integrated caliper motor, do not allow foreign matter enter into motor.

1. Turn off all electrical equipment and the ENGINE START STOP switch.
2. Disconnect the negative battery cable for at least 30 seconds.
3. Remove the rear tires (See page 20-8).
4. Remove the integrated caliper motor.

   (a) Disconnect the integrated caliper motor wire harness connector plug (arrow).

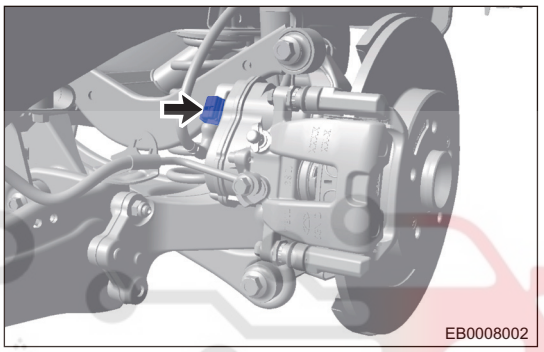

   (b) Remove the 2 fixing bolts (arrows) from left integrated caliper motor.

   Tightening torque
   10 ± 1.0 N·m

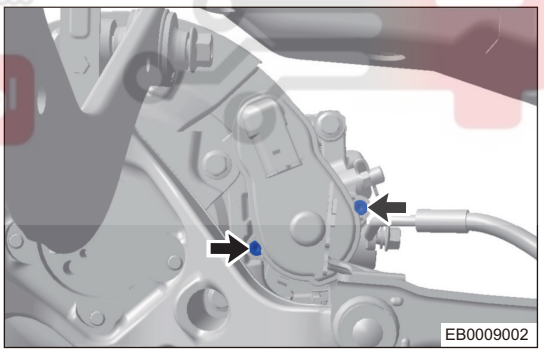

   (c) Remove the integrated caliper motor (arrow).

   Caution:
   - Save the removed parking actuator properly to avoid dust or water polluting grease and seal rings.

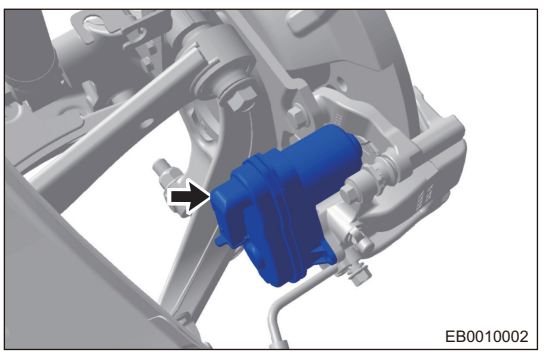

WWW.DIGITALKHODRO.COM 021 62 99 92 92

WWW.DIGITALKHODRO.COM 021 62 99 92 92

EPB Brake Caliper Emergency Release

Warning/Caution/Hint

Hint:

- Use same procedures for right and left sides.
- Procedures listed below are for left side.

Caution:

- If parking brake cannot be released by parking brake switch manually or automatically due to unexpected circumstances (such as battery does not output voltage, parking brake system failure, etc.) during using EPB system, you need to enable parking emergency releasing function to release parking brake, please follow the following steps for specific methods:
- If this malfunction occurs on a slope, please try to tow vehicle to a level road or place obstacles such as rocks in front of or rear of front wheels respectively to prevent wheel rolling, avoiding coasting accident after releasing rear wheel brake urgently.
- Be sure to wear safety equipment to prevent accidents, when EPB brake caliper emergency releasing.

1. Remove the rear tires (See page 20-8).
2. Remove the integrated caliper motor (See page 23-59).
3. Using an inner hexagon wrench, rotate 2-3 cycles clockwise or stop until brake disc can rotate freely (it is normal that a large rotation force is needed due to vehicle parking brake condition).

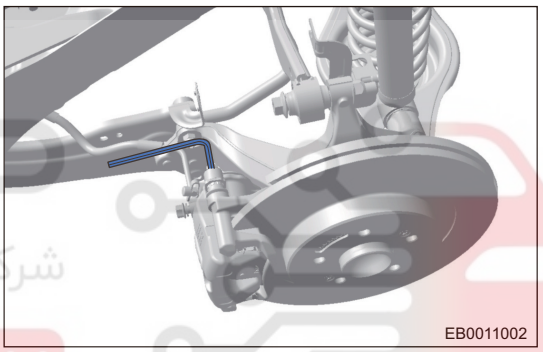

4. The vehicle only loses parking function and does not affect normal braking function after releasing parking brake

   Caution:

   - Emergency release is highly specialized, it is recommend to perform by Chery 4S shop professionals.

Installation

1. Installation is in the reverse order of removal.

   Caution:

   - Be sure to wear safety equipment to prevent accidents, when installing integrated caliper motor.
   - When installing integrated caliper motor, remove sediment, dust and other foreign objects that are on matching surface of parking actuator and on head of parking caliper.
   - When installing integrated caliper motor, check whether the o-ring of parking caliper head is invalid or abnormal. Please replace it in time.
   - When installing integrated caliper motor, parking caliper head and actuator motor must be tightly coupled, tighten fixing bolts to specified torque.
   - When installing integrated caliper motor, check whether the o-ring seal is extruded between parking actuator and parking caliper, if it is extruded, should be reinstalled.
   - When installing integrated caliper motor, manual parking clamp and release must be performed to confirm if parking function is normal.

WWW.DIGITALKHODRO.COM 021 62 99 92 92

WWW.DIGITALKHODRO.COM 021 62 99 92 92

Rear Brake Lining

Removal

Warning/Caution/Hint

Caution:

- When worn minimum value of brake lining is 2 mm, replace 4 brake linings of left and right brake calipers.
- DO NOT perform "Exit Maintenance Mode" using diagnostic tester during vehicle maintenance.
- After removing EPB caliper set, it is strictly forbidden to depress brake pedal, otherwise the piston will rush out of cylinder hole and the brake fluid will come out and pollute brake disc and other parts.
- After completing replacement of new brake lining, make sure to perform "Exit Parking Brake Maintenance Mode" with diagnostic tester.

1. Connect diagnostic tester, turn ENGINE START STOP switch to ON.
2. Perform "Enter PBC Maintenance Mode" operation using diagnostic tester.

3. Remove the rear brake lining.
   (a) Disconnect the integrated caliper motor wire harness connector plug (arrow).

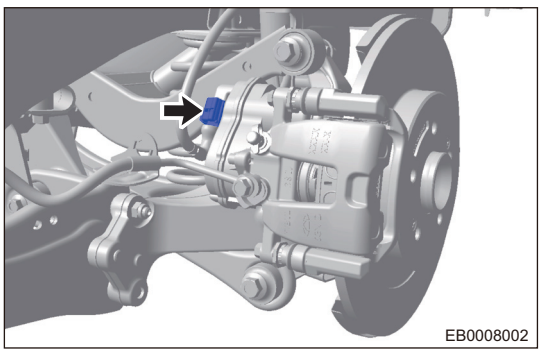

WWW.DIGITALKHODRO.COM 021 62 99 92 92

WWW.DIGITALKHODRO.COM 021 62 99 92 92

(b) Remove the lower fixing bolts (arrow) from single guide pin.

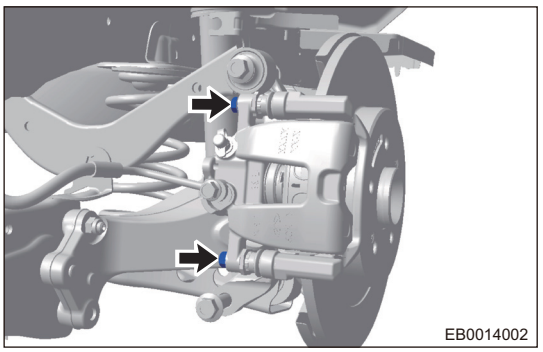

(c) Flip the parking caliper around another guide pin (arrow) and use hook to lift the caliper.

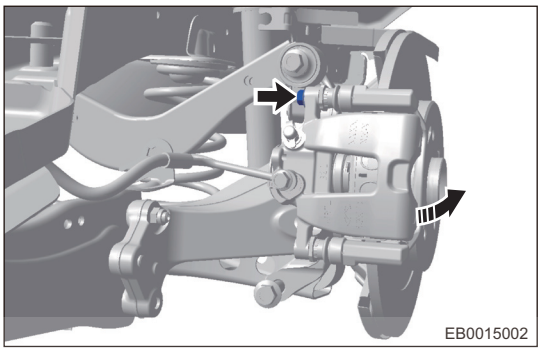

(d) Remove the brake linings (arrow) that need to be replaced.

Caution:

- After removing EPB caliper set, it is strictly forbidden to depress brake pedal, otherwise the piston will rush out of cylinder hole and the brake fluid will come out and pollute brake disc and other parts.
- Move caliper equipped with spring diaphragm slowly during this process, spring may flick the brake lining and drop on the foot.

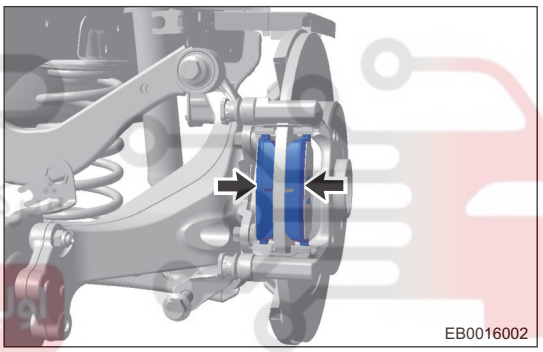

Installation

(a) A thin sheet of steel (1) or old brake lining is added to the piston end to prevent damaging anti-rotating tooth of end surface.

(b) Use special tool to press piston along the direction of hand as shown in figure to push piston back to bottom of cylinder hole.

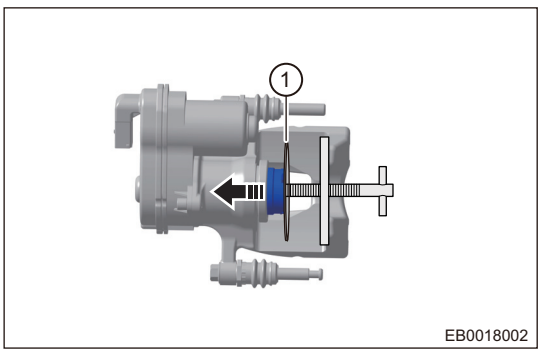

1. Install rear wheel brake lining.
2. Install brake caliper bolt in place.
3. Connect EPB connector and install wheel.
4. perform "Exit PBC Maintenance Mode" operation using diagnostic tester.

WWW.DIGITALKHODRO.COM 021 62 99 92 92

WWW.DIGITALKHODRO.COM 021 62 99 92 92

Show Menu

CHERY (CUSTOMIZED) V58.95 > Model Scan > ABS/ESP (Anti-Lock Braking System/Electronic Stability Program)

Yaw Sensor Calibration(ESP Only)	Repair Bleed
Write E&F Process Control Byte	Write Software Configuration Information
Enter PBC Maintenance Mode	Exit PBC Maintenance Mode
Assembly Test	Apply Both Park Brake
Release Both Park Brake	Apply Left Park Brake
Apply Right Park Brake	Release Left Park Brake
Release Right Park Brake	Vehicle Manufacture Filling-Identification Write-In

Chery (Customized) T15/T17/T18/T19/T1A

EB0018301

دیجیتال خودرو
شرکت دیجیتال خودرو سامانه (مسئولیت محدود)
اولین سامانه دیجیتال تعمیرکاران خودرو در ایران

WWW.DIGITALKHODRO.COM 021 62 99 92 92

WWW.DIGITALKHODRO.COM 021 62 99 92 92

5. Perform simultaneous releasing of rear brake calipers and clamp test.
   (a) Turn ENGINE START STOP switch ON.
   (b) Connect the diagnostic tester.
   (c) Click diagnostic tester, enter "Special function".

   (d) Click "Apply Both Park Brake".

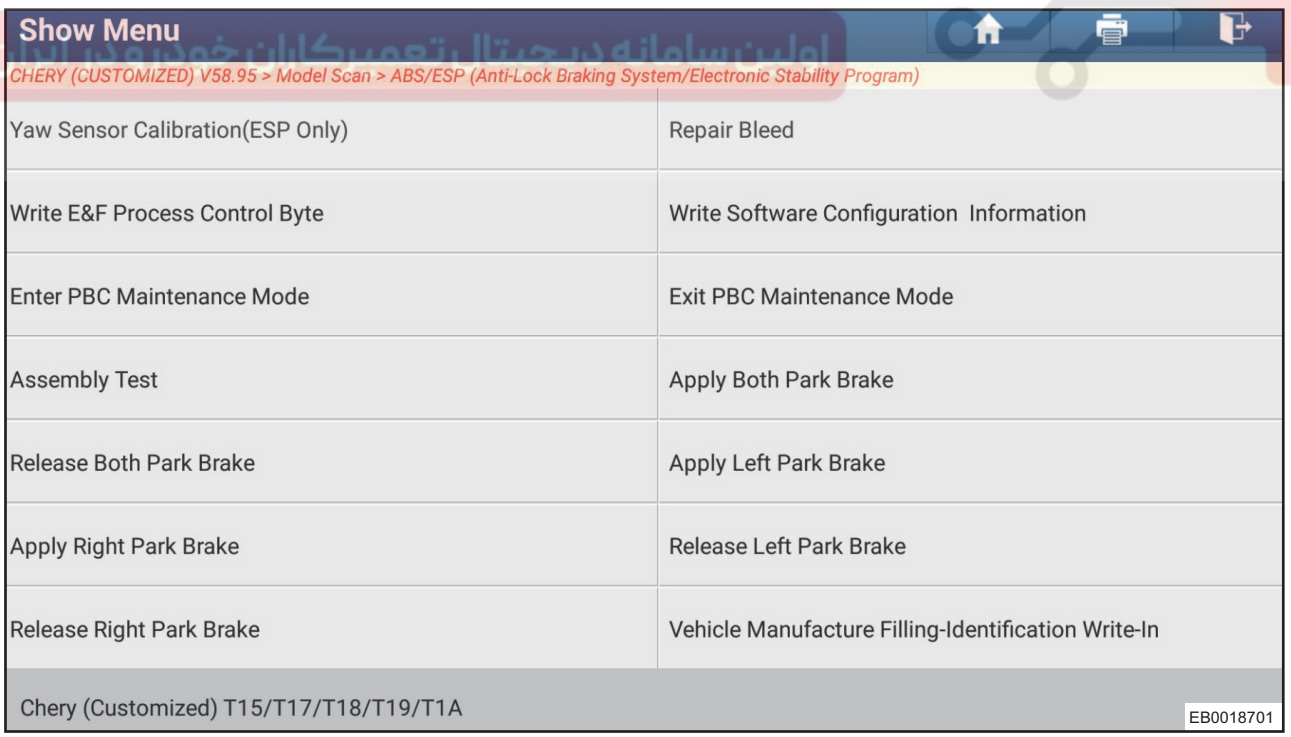

   (e) Click "Release Both Park Brake".

WWW.DIGITALKHODRO.COM 021 62 99 92 92

WWW.DIGITALKHODRO.COM
021 62 99 92 92

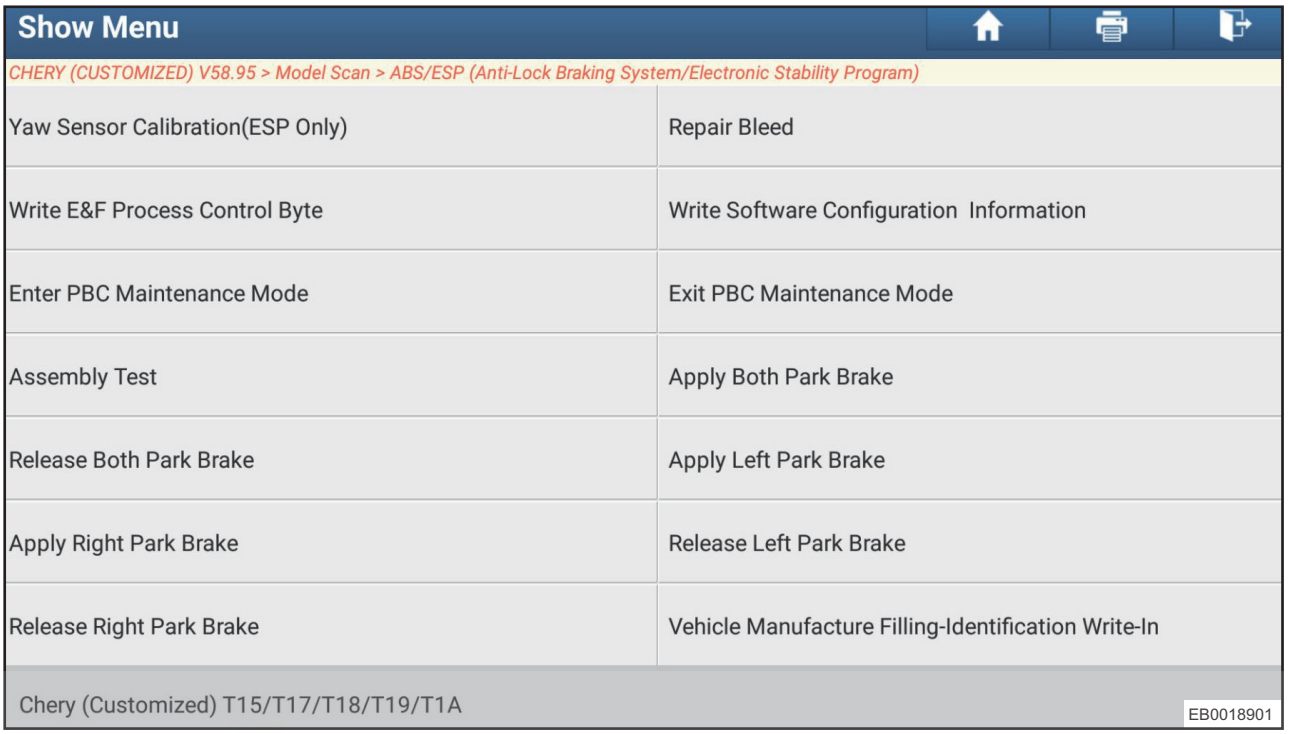

6. Perform simultaneous releasing of rear brake calipers and clamp test.
   (a) Turn ENGINE START STOP switch ON.
   (b) Connect the diagnostic tester.
   (c) Click diagnostic tester, enter "Special function".

شرکت دیجیتال خودرو سامانه (مسئولیت محدود)
اولین سامانه دیجیتال تعمیرکاران خودرو در ایران

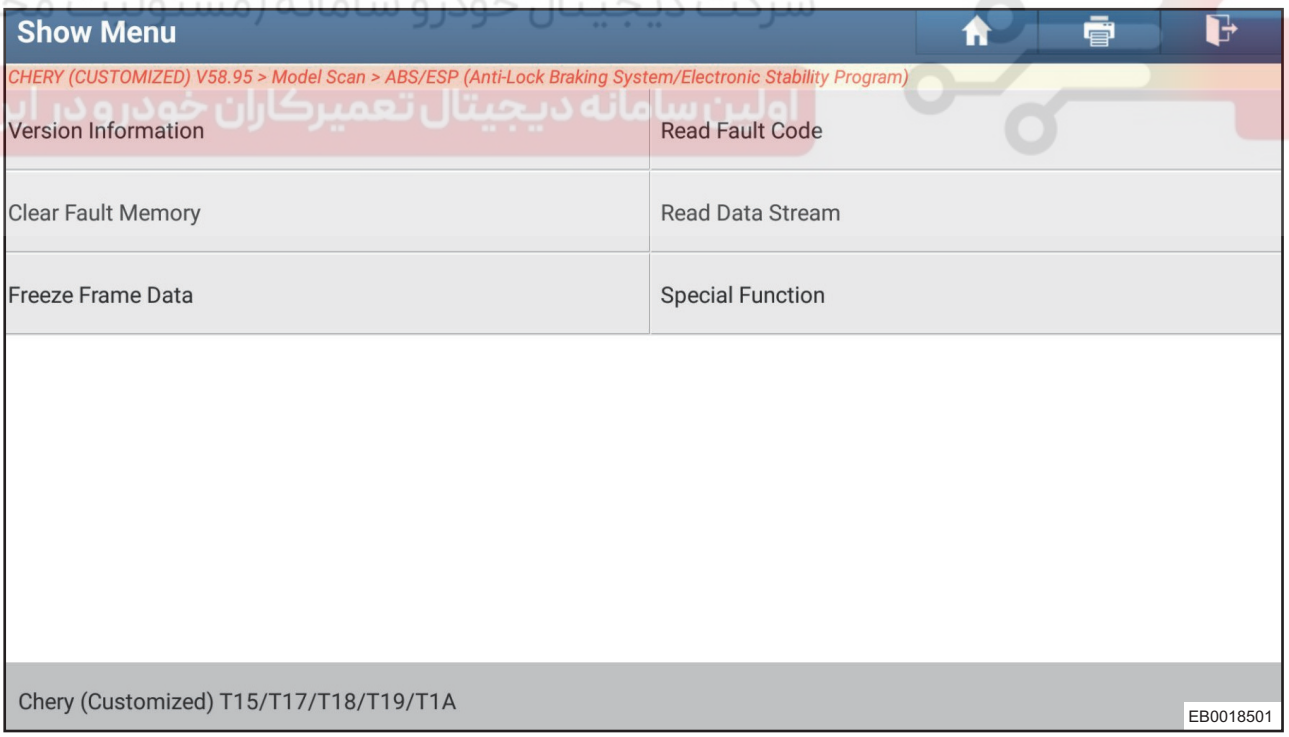

   (d) Click "Apply Rear Left Park Brake".

WWW.DIGITALKHODRO.COM
021 62 99 92 92

(e) Click "Release Rear Left Park Brake".

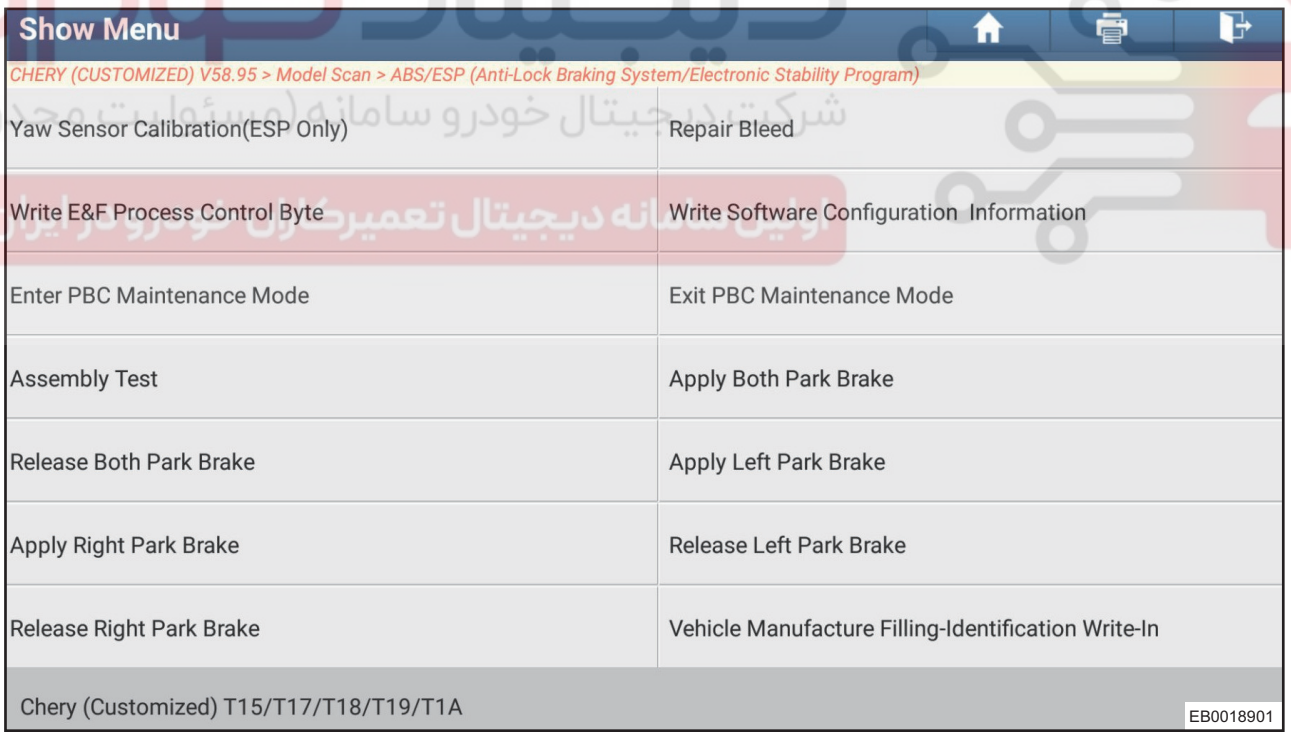

(f) Click "Apply Rear Right Park Brake".

WWW.DIGITALKHODRO.COM 021 62 99 92 92

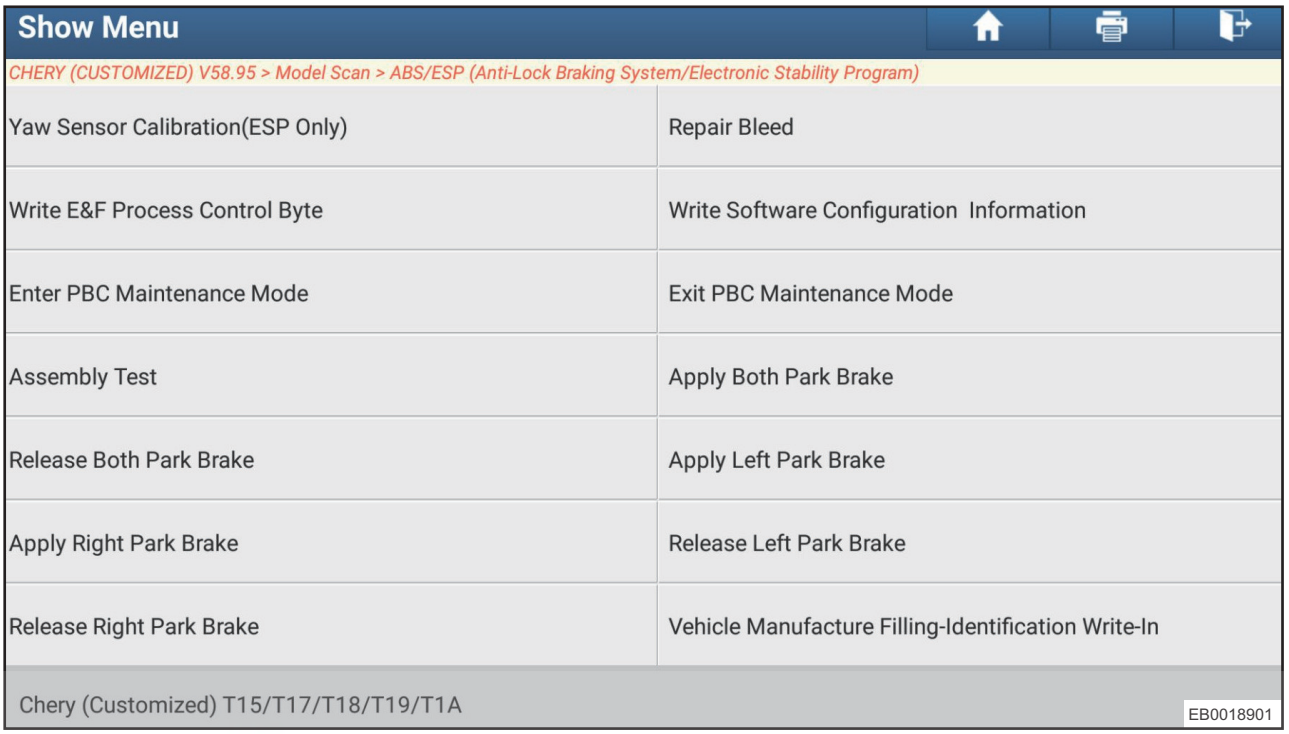

(g) Click "Release Rear Right Park Brake".

Caution:

- Be sure to wear safety equipment to prevent accidents, when installing rear brake linings.
- When replacing brake lining, check whether piston dust boot and guide pin dust boot is broken, and whether the spring plate is deformed or damaged, replace it when necessary.
- After completing replacement of new brake lining, make sure to perform "Exit Parking Brake Maintenance Mode" with diagnostic tester.
- After installing rear brake linings, two manual parking and release are carried out to make the brake lining fully in contact with the brake disc.
- All actions of the EPB action test should be in line with the actual operation, otherwise the EPB system should be overhauled.

WWW.DIGITALKHODRO.COM 021 62 99 92 92

WWW.DIGITALKHODRO.COM 021 62 99 92 92

Show Menu

CHERY (CUSTOMIZED) V58.95 > Model Scan > ABS/ESP (Anti-Lock Braking System/Electronic Stability Program)

Yaw Sensor Calibration(ESP Only)	Repair Bleed
Write E&F Process Control Byte	Write Software Configuration Information
Enter PBC Maintenance Mode	Exit PBC Maintenance Mode
Assembly Test	Apply Both Park Brake
Release Both Park Brake	Apply Left Park Brake
Apply Right Park Brake	Release Left Park Brake
Release Right Park Brake	Vehicle Manufacture Filling-Identification Write-In

Chery (Customized) T15/T17/T18/T19/T1A

EB0018901

دیجیتال خودرو
شرکت دیجیتال خودرو سامانه (مسئولیت محدود)
اولین سامانه دیجیتال تعمیرکاران خودرو در ایران

WWW.DIGITALKHODRO.COM 021 62 99 92 92

WWW.DIGITALKHODRO.COM
021 62 99 92 92

EPB Switch

Inspection of EPB switch

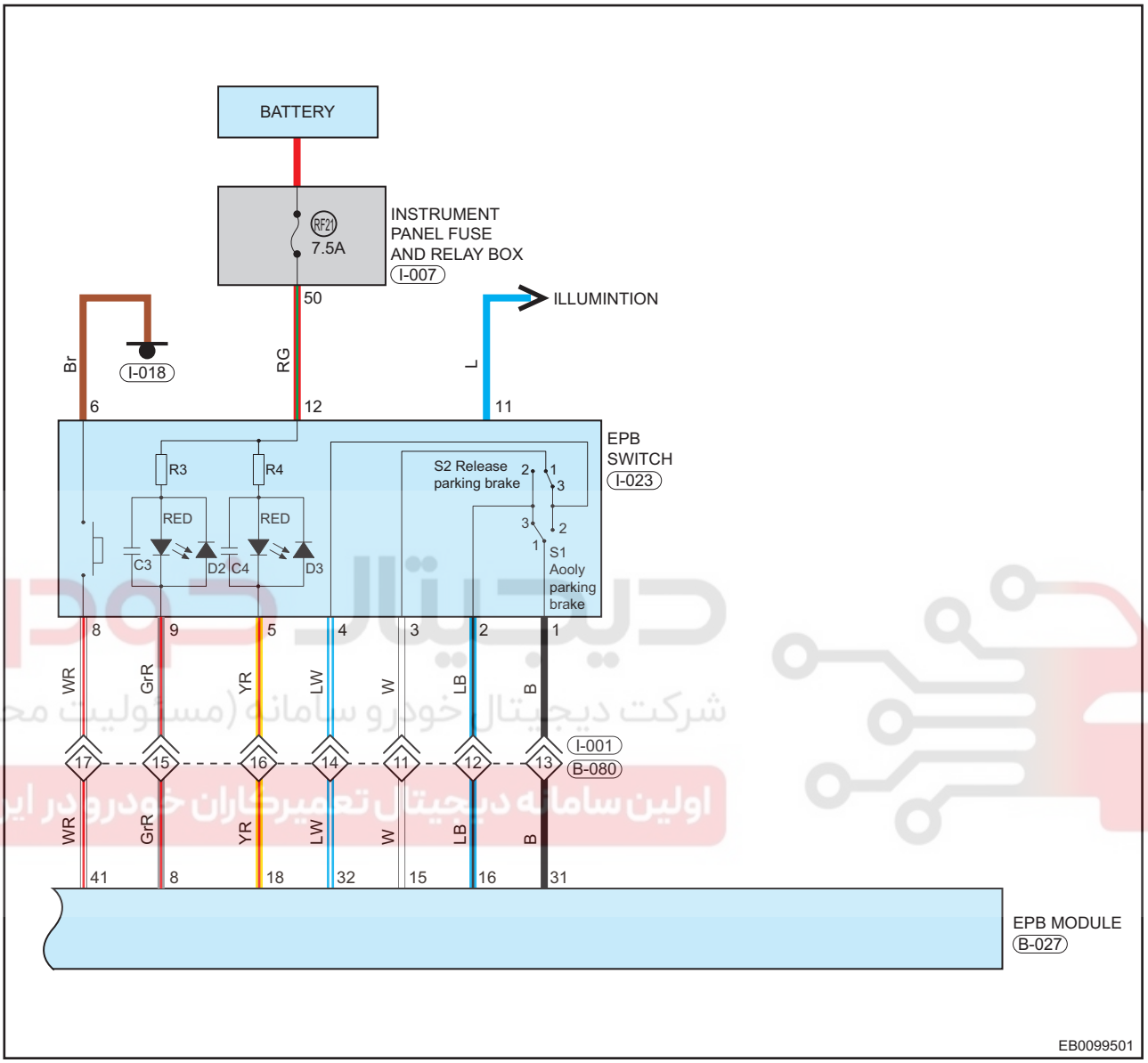

1. Using ohm band of digital multimeter, measure internal resistance of EPB switch according to circuit diagram. If it does not match with measured value in table below, replace the EPB switch.

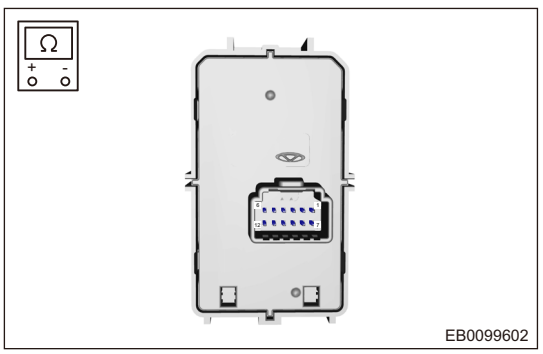

Multimeter Connection	Manual Parking Switch State	Specified Condition
Terminal 1 - Terminal 2	No action	≤ 1 Ω
Terminal 3 - Terminal 4	No action	≤ 1 Ω
Terminal 1 - Terminal 3 - Terminal 4	Pull hand brake	≤ 1 Ω
Terminal 3 - Terminal 2 - Terminal 1	Release hand brake	≤ 1 Ω

WWW.DIGITALKHODRO.COM
021 62 99 92 92

WWW.DIGITALKHODRO.COM 021 62 99 92 92

Multimeter Connection	Automatic Parking Switch State	Specified Condition
Terminal 6 - Terminal 8	Not pressed	∞
Terminal 6 - Terminal 8	Pressed	≤ 1 Ω

Multimeter Connection	Indicator Light	Specified Condition
Terminal 12 - Terminal 5	Manual parking switch indicator light	2.2 kΩ
Terminal 12 - Terminal 9	Automatic parking switch indicator light	2.2 kΩ

دیجیتال خودرو
شرکت دیجیتال خودرو سامانه (مسئولیت محدود)
اولین سامانه دیجیتال تعمیرکاران خودرو در ایران

WWW.DIGITALKHODRO.COM 021 62 99 92 92